iDock® 2.0 Controls

Specification Sheet & Submittal

Standard Features

Advanced controls of loading dock equipment	Integrated controls of all Poweramp dock equipment and dock door installed
Interactive message display with system information	3-color light communication system
View equipment usage and maintenance history	NEMA 3R nonmetallic enclosure
Backlit, raised-dome button design for ease of use	Integrated video
Fault code troubleshooting display and internal LED lights	Designed and manufactured in the USA

General Description

iDock Controls are technologically advanced push-button controllers and light communication used with various Poweramp loading dock equipment. iDock Controls are standard with all automatic Poweramp vehicle restraints, used with or without dock levelers.

Construction

iDock Controls are made with UL 3R Nonmetallic enclosures. The controls feature a modular design to reduce maintenance costs. 3-in-1 light assembly on the controller shows the state of the station and whether it is safe to enter the trailer. LCD display shows status of controls and explains fault conditions. Backlit, raised dome-buttons provide positive feedback and guide users through operation.

Touch Interface

iDock Controls feature an interactive LCD message display for equipment information, system information, maintenance history, counters, and settings. The Display will also provide notices of faults, or instructions for Bypass Restraint mode, the ability to lock the iDock controller, or a sequence of operation.

Warranty

iDock 2.0 Controls feature a full one (1) year base warranty on mechanical and electrical parts, including freight and labor charges in accordance with Systems, LLC's Standard Warranty Policy. Systems, LLC warrants all components to be free of defects in materials and workmanship, under normal use, during the warranty period. This base warranty period begins upon the completion of installation or the sixtieth (60th) day after shipment, whichever is earlier.

S 18.5" HEIGHT | 9.2" DEPTH | 11.8" WIDTH

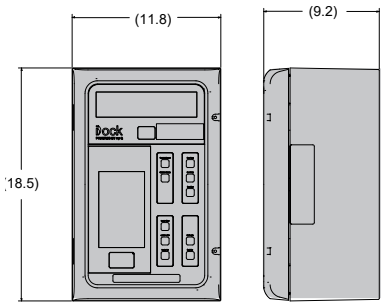

M 23.6" HEIGHT | 9.2" DEPTH | 11.8" WIDTH

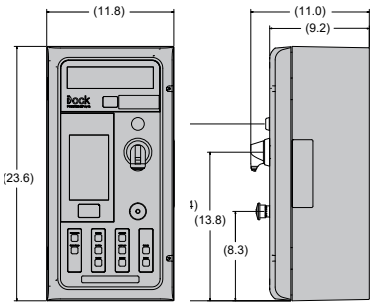

L 23.6" HEIGHT | 9.2" DEPTH | 15.7" WIDTH

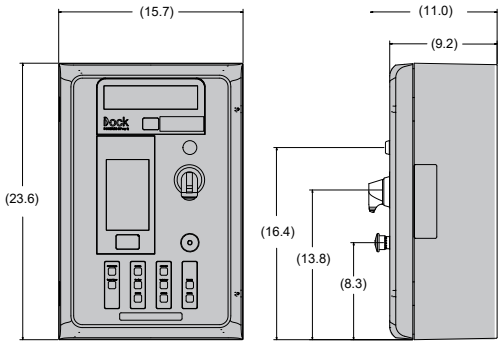

W194N11481 McCormick Dr. | Germantown, WI 53022
poweramp.com | sales@poweramp.com
800-643-5424

A Division of Systems, LLC
POWERAMP
Premium Loading Dock Systems

Order Specifications

Equipment and Options with iDock Controls (Select all that apply)

Restraints

- ❑ PowerHook®
- ❑ TPR UniLock®
- ❑ TPR®
- ❑ PowerStop® AAL
- ❑ PowerStop® MAL
- ❑ UniChock™
- ❑ UXL
- ❑ Light Communication Only - See OPTIONS

Levelers

- ❑ Hydraulic Pit Leveler _____ Series
- ❑ Pneumatic Pit Leveler _____ Series
- ❑ Edge-of-Dock_____ Series
- ❑ Mechanical Leveler_____ Series
- ❑ Vertical Storing (VS)

Interlocking (Select one)

- ❑ None
- ❑ (1) Restraint Engaged Before Leveler Operate
- ❑ (2) Restraint Engaged Before Door Open
- ❑ (3) Leveler Stored Before Restraint Release
- ❑ (4) Leveler Stored Before Door Closed
- ❑ (5) Door Open Before Restraint Engage
- ❑ (6) Door Closed Before Restraint Release
- ❑ Combination 1/3
- ❑ Combination 2/6
- ❑ Combination 1/2/3/4/6
- ❑ Combination 5/1/3/4
- ❑ Combination 1/3/4

Options (Select all that apply)

- ❑ Audible Alarm
- ❑ Emergency Stop Push Button
- ❑ Independent Lip Control
- ❑ Below Dock End Cycle Control (Requires Independent Lip Controls)
- ❑ Close Door to Reset Lights
- ❑ Leveler Stored Indication Light
- ❑ CentraPower
- ❑ LiftMaster Logic 5.0 Maintenance System Monitoring
- ❑ LiftMaster Maxum Garage Door Opener
- ❑ Light Communication System (Select One)
  - ❑ Manual Control
  - ❑ Automatic Control with Leveler Position
  - ❑ Automatic Control with Door Position
- ❑ 3-Button Door Controls
- ❑ Dock Light (Select One)
  - ❑ Manual Control (On/Off)
  - ❑ Automatic Control with Door Position
  - ❑ Automatic Control with Leveler Position
- ❑ Edge Light Controls
- ❑ Guide Light Controls (1 Light or 3 Light)
- ❑ Sensor(s)
  - ❑ Fluid Level
  - ❑ Forklift Activity
  - ❑ Vehicle Present
- ❑ Signal to External Equipment (Dry Contact)
  - ❑ Restraint Engaged or in Bypass
  - ❑ Leveler Stored
  - ❑ Vehicle Present
- ❑ External Equipment Interlocking (Signal to Allow Operation) (Select One)
  - ❑ Prevent Leveler Operation
  - ❑ Prevent Door Operation
  - ❑ Restraint Release
  - ❑ All Operation (All 3 of the Above)
- ❑ Disconnect (Select One)
  - ❑ Rotary Fused
  - ❑ Rotary Non-Fused
  - ❑ Flange Fused
  - ❑ Flange Non-Fused
- ❑ Receptacle
- ❑ RFID Card Reader
- ❑ Mounting Side of Dock (looking out of the building)
  - ❑ Left of Dock
  - ❑ Right of Dock

Voltage (Select one)

- ❑ 115V / 1PH / 60HZ
- ❑ 208V / 1PH / 60HZ
- ❑ 230V / 1PH / 60HZ
- ❑ 208V / 3PH / 60HZ
- ❑ 230V / 3PH / 60HZ
- ❑ 460V / 3PH / 60HZ
- ❑ 575V / 3PH / 60HZ
- ❑ 230V / 1PH / 50HZ
- ❑ 400V / 3PH / 50HZ

Required Information

CUSTOMER	
JOB	
LOCATION	
NUMBER OF UNITS	
MODEL	
SIZE	
REPRESENTED BY	
SALES REP	

Certified for Construction

BY	
DATE	
COMPANY	
CITY & STATE	
VOLTAGE / PHASE	
DRAWING #	

Designed, Engineered, and Manufactured in the U.S.A. © 2025 Systems, LLC/Poweramp
Consistent with our policy of continuing product improvement, we reserve the right to change product specifications without notice or obligation.
A continuing product improvement process is in effect at Systems, LLC. We reserve the right to make product changes without prior notice.