A Division of Systems, LLC

POWERAMP®

Premium Loading Dock Systems

TPR®

Vehicle Restraint

Owner's/User's Manual

Poweramp • Division of Systems, LLC • W194 N11481 McCormick Drive • Germantown, WI 53022
800.643.5424 • fax: 262.255.5917 • www.**poweramp**.com • techservices@poweramp.com

Printed in U.S.A.
Manual No. 4111-0035
October 2026

© 2026 Systems, LLC - All Rights Reserved

Table of Contents

Page

Precautions
Recognize Precautionary Information 1
General Operational Precautions 1
Operational Precautions 2
Safety Decals 4
Placard 5
Owner's/User's Responsibilities 6

Introduction
General Information 8
Component Identification 9

Installation
Installation Precautions 10
Installation Overview 11
Roller Track Installation - Without Embed 12
Roller Track Installation - With Embed 14
Carriage Installation 16
Install Control Panel and Wiring 17
Placard Installation Instructions 18

Operation
Operational Precautions 19
Operation - Normal 20
Operation - Bypass 21
Multi-Colored & Outside Light Sequence Charts 22
Restraint Capture Zones 23

Maintenance
Maintenance Precautions 24
Periodic Maintenance 25

Adjustments
Drive Chain & Brake Torque Adjustments 26
Adjust Dock Leveler & Vehicle Restraint Interlock 28

Troubleshooting
Magnetic Switch Test Procedure 30
TPR Troubleshooting 32

Parts

TPR26 (Magnetic Switches) Carriage Assembly 34
Roller Track & Springs 36
Slope Extensions & Spring Plate 37
Cantilever Brackets 38
OSLA (Outside Light Assembly) 39
Signs 41
Optional Truck Present Sensor 42

Miscellaneous
Customer Information 43
Warranty ..... Back Cover

Recognize Precautionary Information

Safety-Alert Symbol

The Safety-Alert Symbol is a graphic representation intended to convey a safety message without the use of words. When you see this symbol, be alert to the possibility of death or serious injury. Follow the instructions in the safety message panel.

DANGER

The use of the word DANGER signifies the presence of an extreme hazard or unsafe practice which will most likely result in death or severe injury.

WARNING

The use of the word WARNING signifies the presence of a serious hazard or unsafe practice which could result in death or serious injury.

CAUTION

The use of the word CAUTION signifies possible hazard or unsafe practice which could result in minor or moderate injury.

NOTICE

The use of the word NOTICE indicates information considered important, but not hazard-related, to prevent machine or property damage.

SAFETY INSTRUCTIONS

Indicates a type of safety sign, or separate panel on a safety sign, where safety-related instructions or procedures are described.

General Operational Precautions

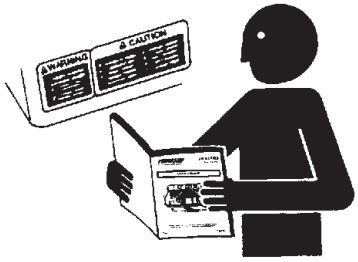

Read and understand the Owner's/User's Manual and become thoroughly familiar with the equipment and its controls before operating the equipment.

Never operate equipment while a safety device or guard is removed or disconnected.

Never remove DANGER, WARNING, or CAUTION signs, Placards or Decals on the equipment unless replacing them.

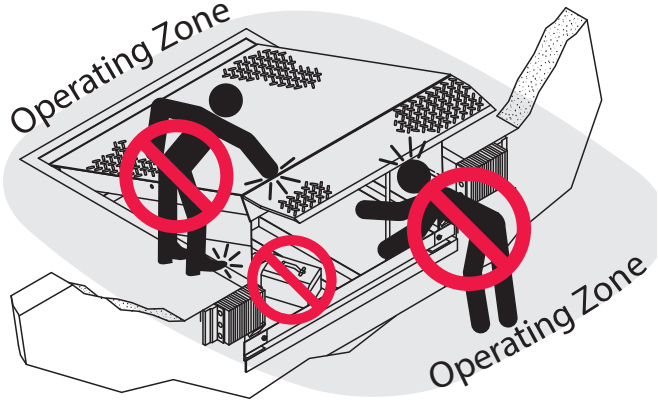

Figure 1

Do not start the equipment until all unauthorized personnel in the area have been warned and have moved outside the operating zone (Figure 1).

Remove any tools or foreign objects from the operating zone before starting.

Keep the operating zone free of obstacles that could cause a person to trip or fall.

WARNING: This product can expose you to chemicals including lead, which are known to the State of California to cause cancer or birth defects or other reproductive harm. For more information go to www.P65Warnings.ca.gov

© 2026 Systems, LLC

PRECAUTIONS

Operational Precautions

Learn the safe way to operate this equipment. Read and understand the manufacturer's instructions. If you have any questions, ask your supervisor.

DANGER

Stay clear of dock leveling device when transport vehicle is entering or leaving area.

Do not move or use the dock leveling device if anyone is under or in front of it.

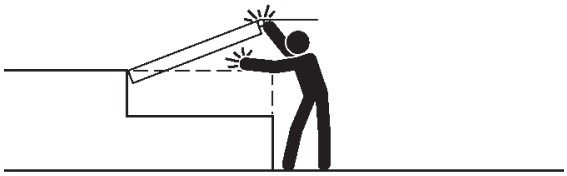

Keep hands and feet clear of pinch points. Avoid putting any part of your body near moving parts.

WARNING

Chock/restrain all transport vehicles. Never remove the wheel chocks or release the restraining device until loading or unloading is finished, and transport driver has been given permission to drive away.

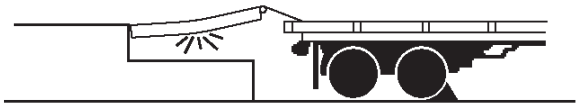

Do not use a broken or damaged dock leveling device or restraining device. Make sure proper service and maintenance procedures have been performed before using.

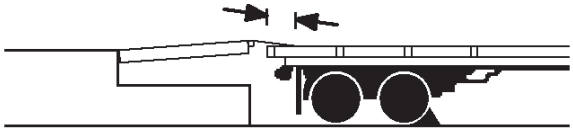

Make sure lip overlaps onto transport vehicle bed at least 4 in. (102 mm).

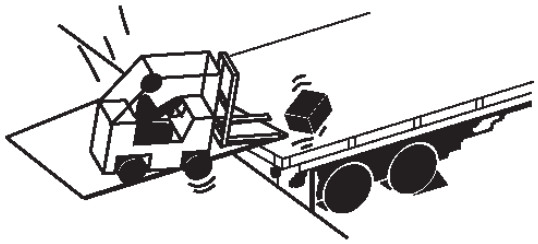

Keep a safe distance from both side edges.

4111-0035 — October 2026
© 2026 Systems, LLC

Operational Precautions

⚠WARNING

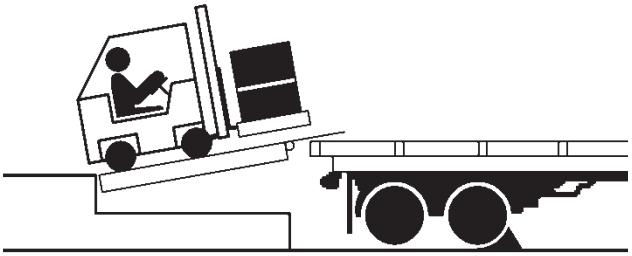

Do not use dock leveling device if transport vehicle is too high or too low.

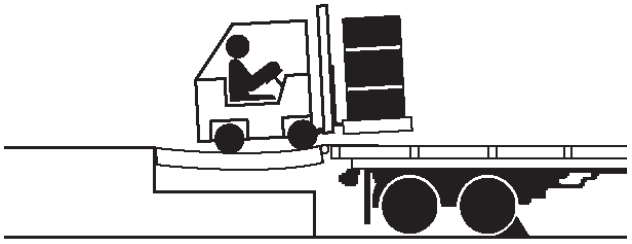

Do not overload the dock leveling device.

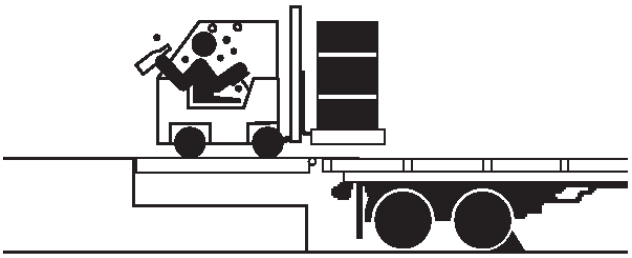

Do not operate any equipment while under the influence of alcohol or drugs.

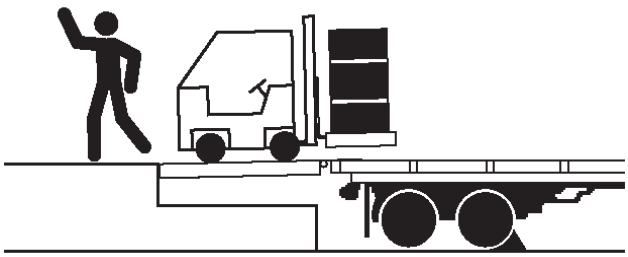

Do not leave equipment or material unattended on dock leveling device.

© 2026 Systems, LLC

PRECAUTIONS

Safety Decals

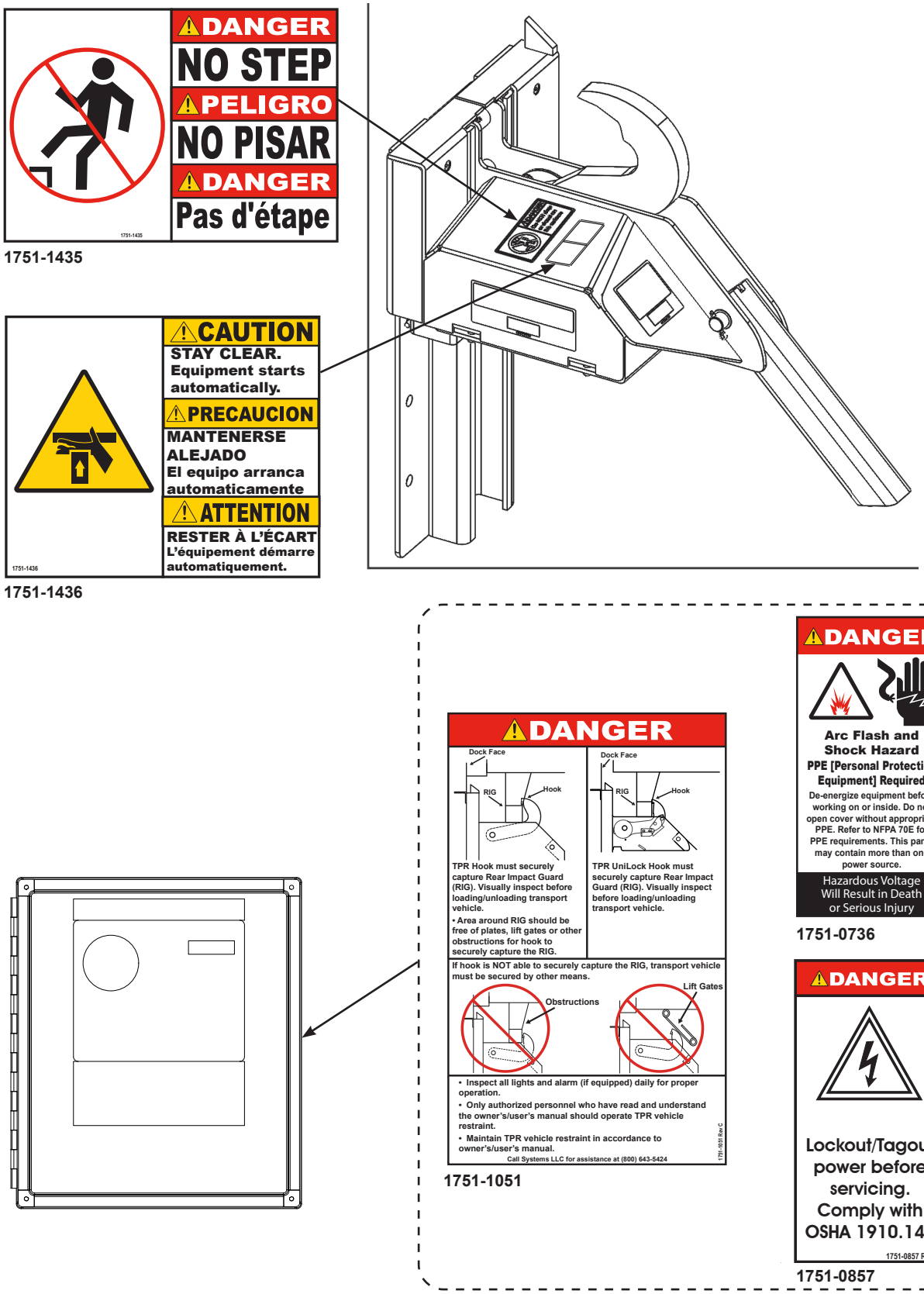

*Control box appearance may vary depending on options.

Figure 2

© 2026 Systems, LLC

Placard

DANGER

- Read and follow all instructions, warnings, and maintenance schedules in the manual and on placards.
- Vehicle restraint operation and servicing is restricted to authorized personnel.

1. Before using the vehicle restraint:
   - Remove any debris, snow, or ice that may obstruct vehicle restraint operation.
   - Alert personnel in the area of potential vehicle restraint operation and ensure area is clear.
   - Operate the vehicle restraint through one complete cycle inspecting it for proper operation and light sequence. Advise maintenance personnel of any damage or improper operation immediately. Remove all malfunctioning or damaged vehicle restraints from service using approved lockout/tagout procedures.
2. Before attempting to restrain a transport vehicle:
   - Verify that transport vehicle is positioned squarely against dock bumpers.
   - Inspect the transport vehicle's rear impact guard (RIG). Damaged or missing RIGs, lift gates, plates or other obstructions may not allow the vehicle restraint to securely capture the RIG. Wheel chocks must be used whenever the ability for the vehicle restraint to capture the RIG is in question. **(NOTE: The transport vehicle's suspension and load condition will affect trailer height.)**
3. After activating vehicle restraint:
   - Verify that the transport vehicle's RIG has been restrained successfully. In the event this cannot be determined, use wheel chocks in addition to restraint.
   - If equipped with a light communication system, load and unload on GREEN light only.
4. Maintenance or service must be performed by authorized personnel only. Follow approved lockout/tagout procedures.

FAILURE TO FOLLOW THESE INSTRUCTIONS WILL RESULT IN DEATH OR OTHER SERIOUS INJURY.

Scan to view our owner's/user's manuals online.
www.**LoadingDockSystems**.com

1.800.643.5424
Call for additional placards, or manuals, or with questions regarding proper use, maintenance, and repair of dock leveler.

POWERAMP McGUIRE DLM SYSTEMS Loading Dock Equipment

WARNING: CANCER AND REPRODUCTIVE HARM
www.P65Warnings.ca.gov

1751-0880 Rev G

1751-0880

OPERATING INSTRUCTIONS

VEHICLE RESTRAINTS

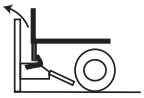

ENGAGE RESTRAINT

1. Open overhead door and visually check that transport vehicle is positioned squarely against dock bumpers and has a RIG bar. Inside light is RED and outside light is GREEN.
2. Press the ENGAGE button to activate restraint.
3. Once RIG has been secured, inside light is GREEN and outside light is RED

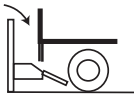

RELEASE RESTRAINT

1. To release restraint press the RELEASE button. When safely stored, inside light is RED and outside light is GREEN.

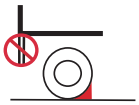

BY-PASS

1. If restraint is unable to secure transport vehicle's RIG, use wheel chocks to secure transport vehicle at the dock.
2. Turn switch to BY-PASS. Inside light is GREEN and outside light is RED.
3. Loading/unloading may proceed with caution.

BY-PASS RESET (RETURN TO NORMAL OPERATION)

1. When loading or unloading is completed and wheel chocks are removed. Manual reset of BY-PASS is accomplished by pressing the RELEASE button or turning switch to NORMAL. Lights change to RED inside and GREEN outside.

Use for PowerHook, PowerHold, HoldTite and TPR series

© 2026 Systems, LLC

OWNER'S/USER'S RESPONSIBILITIES

1) The manufacturer shall provide to the initial purchaser and make the following information readily available to the owners/users and their agents, all necessary information regarding Safety Information, Operation, Installation and Safety Precautions, Recommended Initial and Periodic Inspections Procedures, Planned Maintenance Schedule, Product Specifications, Troubleshooting Guide, Parts Break Down, Warranty Information, and Manufacturers Contact Information.

2) The owner/user should recognize the inherent dangers of the interface between the loading dock and the transport vehicle. The owner/user should, therefore, train and instruct all operators in the safe operation and use of the restraining device in accordance with manufacturer's recommendations and industry standards. Effective operator training should also focus on the owner's/user's company policies, operating conditions and the manufacturer's specific instructions provided with the restraining device. Maintaining, updating and retraining all operators on safe working habits and operation of the equipment, regardless of previous experience, should be done on a regular basis and should include an understanding and familiarity with all functions of the equipment. Owners/users shall actively maintain, update and retrain all operators on safe working habits and operations of the equipment.

3) When selecting a restraining device, it is important to consider not only present requirements but also future plans and any possible adverse conditions, environmental factors or usage. The owners/users shall provide application information to the manufacturer to receive recommendations on appropriate equipment specifications.

4) The owner/user must see all nameplates, placards, decals, instructions and posted warnings are in place and legible and shall not be obscured from the view of the operator or maintenance personnel for whom such warnings are intended for. Contact manufacturer for any replacements.

5) Modifications or alterations of restraining devices shall be made only with prior written approval from the original manufacturer. These changes shall be in conformance with all applicable provisions of the MH30.3 standard and shall also satisfy all safety recommendations of the original equipment manufacturer of the particular application.

6) An operator training program should consist of, but not necessarily be limited to, the following:

   a) Select the operator carefully. Consider the physical qualifications, job attitude and aptitude.
   b) Assure that the operator reads and fully understands the complete manufacturer's owners/users manual.
   c) Emphasize the impact of proper operation upon the operator, other personnel, material being handled, and equipment. Cite all rules and why they are formulated.
   d) Describe the basic fundamentals of the restraining device and components design as related to safety, e.g., mechanical limitation, stability, functionality, etc.
   e) Introduce the equipment. Show the control locations and demonstrate functions. Explain how they work when used properly and maintained as well problems when they are used improperly.
   f) Assure that the operator understands nameplate data, placards and all precautionary information appearing on the restraining device.
   g) Supervise operator practice of equipment.
   h) Develop and administer written and practical performance tests. Evaluate progress during and at completion of the course.
   i) Administer periodic refresher courses. These may be condensed versions of the primary course and include on-the-job operator evaluation.

7) It is recommended that the transport vehicle is positioned as close as practical to the dock leveling device and in contact with both bumpers. When an industrial vehicle is driven on or off a transport vehicle during loading and unloading operations, the transport vehicle parking brakes shall be applied and wheel chocks or a restraining device that provides equal or better protection of wheel chocks shall be engaged. Also, whenever possible, air-ride suspension systems should have the air exhausted prior to performing said loading and unloading operations.

© 2026 Systems, LLC

8) When goods are transferred between the loading dock and a trailer resting on its support legs/ landing gear instead of a tractor fifth wheel or converter dolly, it is recommended that an adequate stabilizing device or devices shall be utilized at the front of the trailer.

9) In order to be entitled to the benefits of the standard product warranty, the dock safety equipment must have been properly installed, maintained and operated in accordance with all manufacturer's recommendations and/ or specified design parameters and not otherwise have been subject to abuse, misuse, misapplication, acts of nature, overloading, unauthorized repair or modification, application in a corrosive environment or lack of maintenance. Periodic lubrication, adjustment and inspection in accordance with all manufacturers' recommendations are the sole responsibility of the owner/user.

10) Manufacturer's recommended maintenance and inspection of all restraining devices shall be performed in conformance with the following practices: A planned maintenance schedule program must be followed, only trained and authorized personnel shall be permitted to maintain, repair, adjust and inspect restraining devices, and only the use of original equipment manufacturer parts, manuals, maintenance instructions, labels, decals and placards or their equivalent. Written documentation of maintenance, replacement parts or damage should be kept. In the event of damage, notification to the manufacturer is required.

11) Restraining devices that are structurally damaged shall be removed from service, inspected by a manufacturer's authorized representative, and repaired or replaced as needed or recommended by the manufacturer before being placed back in service.

© 2026 Systems, LLC

INTRODUCTION

General Information

Figure 3

This manual provides current information on the TPR vehicle restraint. Due to ongoing product improvement, some parts may have changed, along with operation and troubleshooting methods. This manual describes these changes where applicable.

The TPR is a truck positioned vehicle restraint, available as a standalone unit or integrated with other loading dock equipment.

The vehicle restraint is firmly anchored to the building wall for maximum holding power. The TPR restraint is designed to withstand a pulling force of 32,000 lbs.

The durable zinc-plated, steel housing unit is designed to withstand impact from trailers and protect all internal components from any weather conditions.

The TPR vehicle restraint is engaged electrically, allowing the hook to rise and securely engage and hold a trailer's RIG bar. The unit incorporates a self-contained motor assembly and helps prevent unexpected trailer departure from the loading dock during the loading/unloading process.

To illustrate which connections are to be made in the field at installation, electrical drawings are included with each order or by contacting Systems, LLC Technical Services.

Call Systems, LLC to discuss available options to meet your specific needs.

Technical Service at 800-643-5424 or techservices@loadingdocksystems.com

© 2026 Systems, LLC

Component Identification

Inspect package and all components. Report any missing or damaged items immediately and note on the shipping Bill Of Lading (BOL).

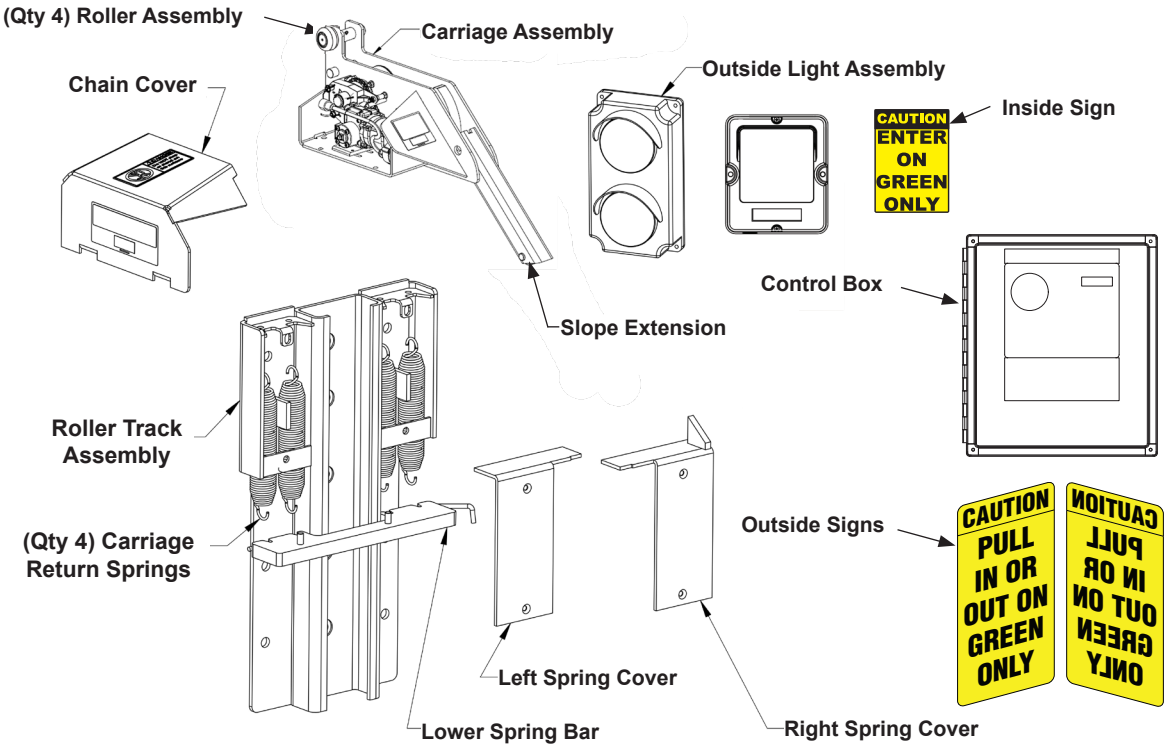

(QTY 15) CONCRETE ANCHORS INCLUDED (not shown)

Figure 4

**Control box appearance may vary depending on options.*

© 2026 Systems, LLC

Installation Precautions

⚠WARNING

Post safety warnings and barricade the work area at dock level and ground level to prevent unauthorized use of the dock leveler before installation has been completed.

⚠WARNING

DO NOT grind or weld if hydraulic fluid or other flammable liquid is present on the surface to be ground or welded.

DO NOT grind or weld if uncontained hydraulic fluid or other flammable liquid is present. Stray sparks can ignite spills or leaks near the work area. Always clean up the oil leaks and spills before proceeding with grinding or welding.

Always keep a fire extinguisher of the proper type nearby when grinding or welding.

⚠CAUTION

Only trained installation professionals with the proper equipment should install this product.

NOTICE

DO NOT connect the vehicle restraint electrical wiring and ground connections until all welding has been completed.

DO NOT ground welding equipment to any electrical components of the vehicle restraint. Always ground welding equipment to the vehicle restraint base, NEVER to the moving components.

Failure to follow these instructions may damage the motor, wiring, and/or control panel.

© 2026 Systems, LLC

Installation Overview

Note: This is a generic overview of a typical TPR installation. See full installation instructions on pages 12-18 for different installation types and all steps.

	Install Notes
1	Place control box near the door opening, in plain view of the leveler, within arms reach and near eye level.
2	Allow adequate space for seals and shelters, when mounting outside lights/ signs.
3	3/4" conduit recommended, or diameter based on local code. (Supplied by others.)
4	Junction box mounted on dock face. Must Not extend more than 3". (Supplied by others.)
5	Circuit disconnect. (Supplied by others.)

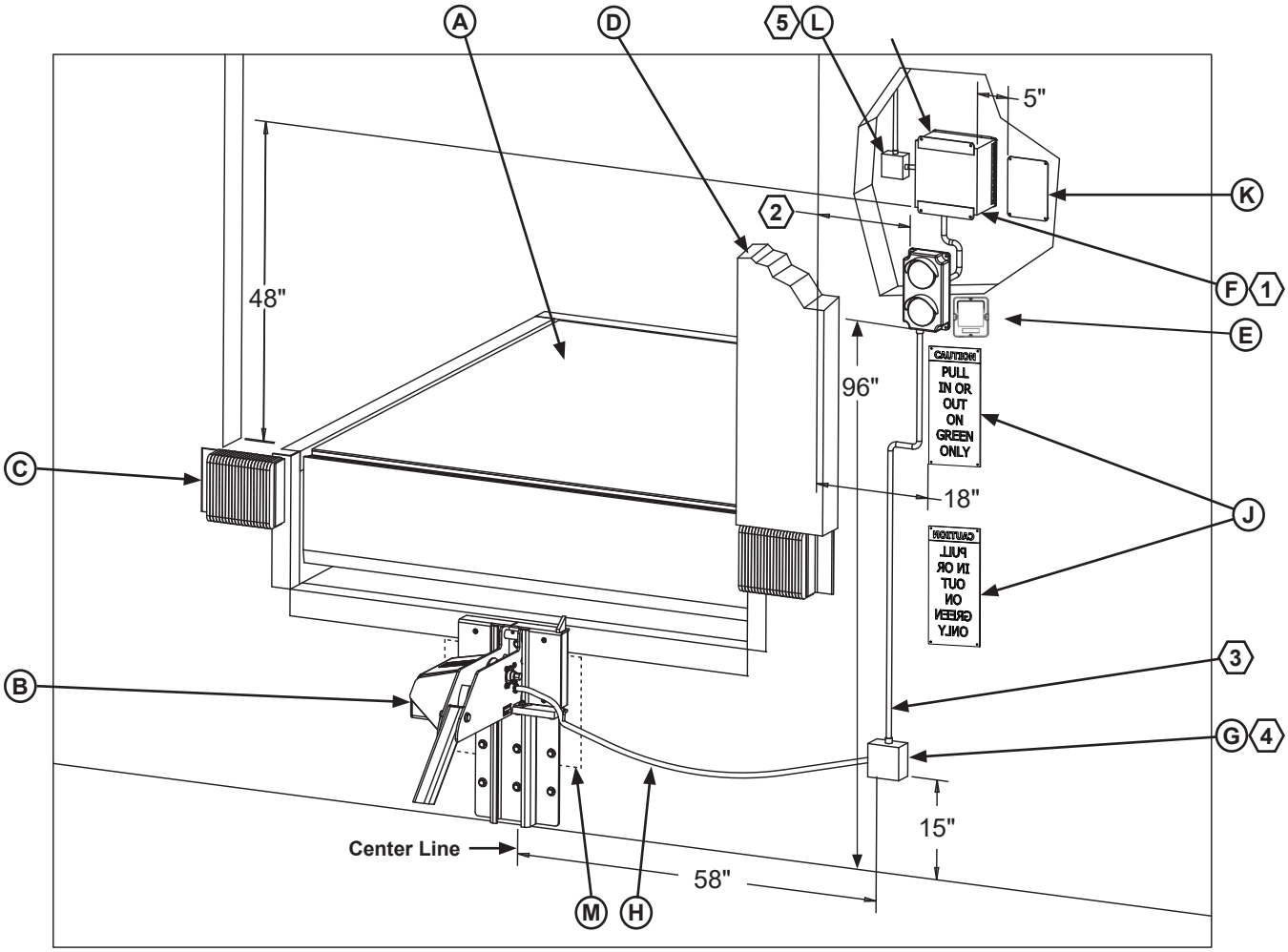

Figure 5

A — Dock Leveler
B — TPR Vehicle Restraint
C — Bumpers
D — Dock Seal
E — Outside Light Assembly
F — Control Box/ Inside Light
G — Junction Box
H — Wire Harness (TPR)
J — Outside Signs
K — Inside Sign
L — Disconnect
M — Optional Imbed Plate

© 2026 Systems, LLC

Roller Track Installation - Without Embed

⚠ CAUTION

Do not install the TPR vehicle restraint directly onto a concrete block or brick dock face; contact Systems, LLC to purchase a suitable Z-bracket.

NOTICE

Minimum 4" thick bumpers are required at all positions where a TPR vehicle restraint is installed. DO NOT install on docks without minimum 4" thick bumpers. For thicker bumpers, consult the factory.

Note: Walls must be poured concrete, 8" thick minimum to install with wedge anchors. Concrete block or brick is not acceptable.

Install roller track plate onto dock face at specified location by using the fifteen (15) concrete anchors provided, in conjunction with welding to pit steel or a leveler frame. If required, roller track can be trimmed up to a maximum of 5" from the bottom.

The roller track plate must be plumb with the dock face. If not, use and weld (6) shims 2" wide x 25-5/8" long. Shims must be the full length of the roller track mounting plate. If shims are over 1/2" thick, use longer anchors. If shims need to be 1" thick or more, contact Systems, LLC Technical Services.'

Some levelers are slightly recessed within the pit and thus require a shim to be inserted between the roller track plate and the leveler front subframe and welded in place.

Note: Some mechanical dock levelers have an adjusting nut access hole in the leveler front subframe. If the TPR vehicle restraint roller track interferes with the access hole, the track plate must be cut to allow access.

Anchor Installation

Note: Fifteen (15) concrete anchors are provided with each TPR vehicle restraint. An anchor must be installed in each roller track plate hole except for those plug-welded to embedded steel.

1. Place roller track at desired location, spaced 5/8" above the drive.
2. Using the roller track as a guide, drill holes of 5/8" diameter and minimum of 4-5/8" deep at all locations where roller track is not overlapping curb steel. Clean out holes.
3. Insert anchors and drive them flush with roller track plate, making sure that the threaded wedge is inserted first. Do not disassemble anchors prior to installation.
4. Once all anchors are installed, torque to 60 ft-lbs.

Welding Instructions

Note: If the installation being worked on is a retrofit or replacement, make sure that the power source has been tagged and locked out according to OSHA regulations and approved local electrical codes, then remove the motor and limit switch connections from the control harness located in the outside junction box.

1. Disconnect power and ground leads to dock leveler (if equipped).
2. Plug weld all holes that are in contact with embedded steel. All fifteen (15) holes must be either plug welded or anchored. Minimum electrode must be 1/8" 7018 or better.
3. Weld across top of roller track plate to curb steel or leveler frame with 3" long 1/4" fillet welds.
4. Once all welding has been completed, reconnect power and ground leads to dock leveler (if equipped).
5. Clean and touch up all welds once complete.

4111-0035 — October 2026
© 2026 Systems, LLC

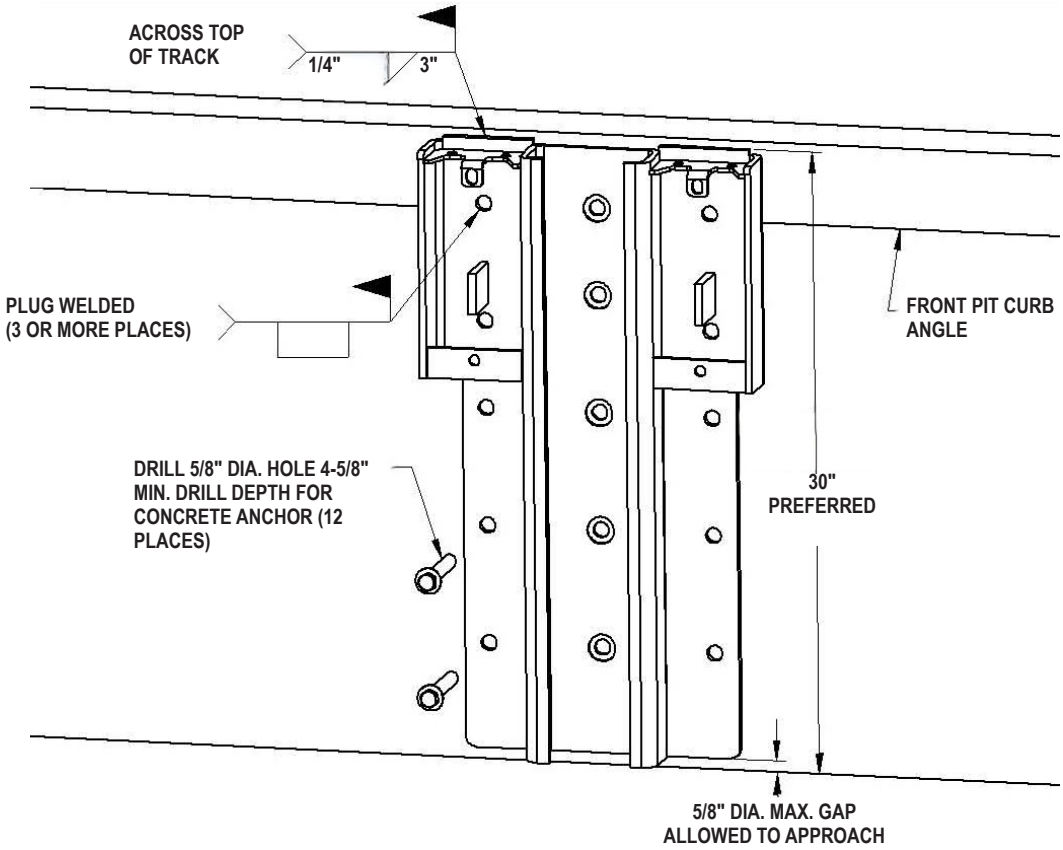

Figure 6

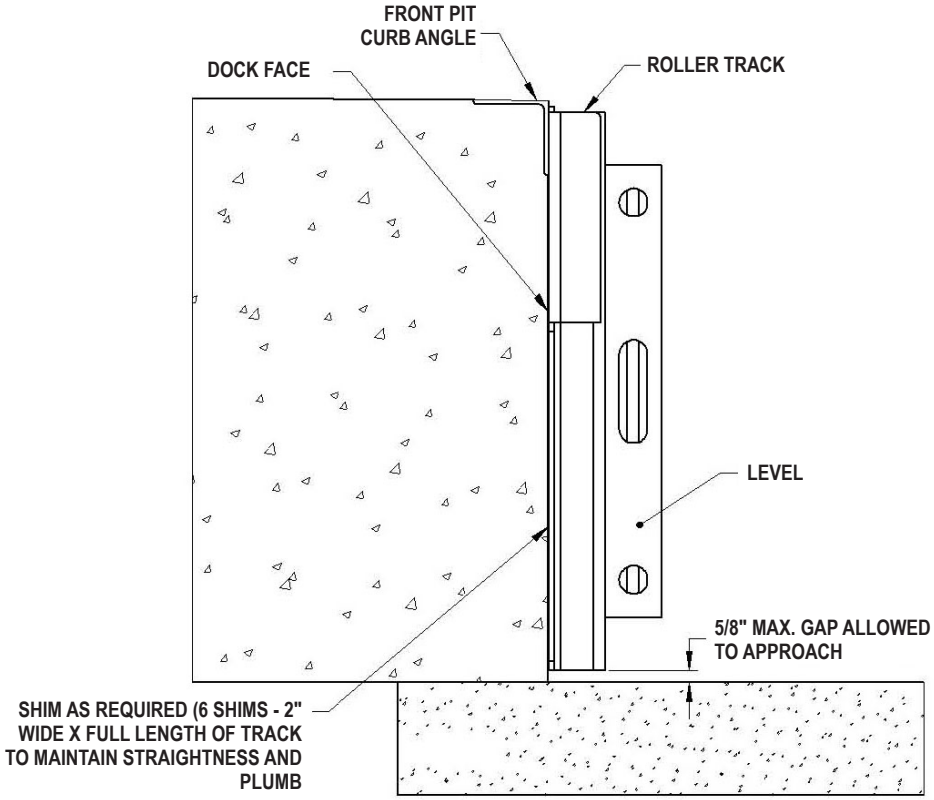

Figure 7

© 2026 Systems, LLC

Roller Track Installation - With Embed

⚠ CAUTION

Do not install the TPR vehicle restraint directly onto a concrete block or brick dock face; contact Systems, LLC to purchase a suitable Z-bracket.

NOTICE

Minimum 4" thick bumpers are required at all positions where a TPR vehicle restraint is installed. DO NOT install on docks without minimum 4" thick bumpers. For thicker bumpers, consult the factory.

Install roller track plate onto dock face at specified location by welding to an embedded steel plate, in conjunction with welding to pit steel or a leveler frame, and using provided concrete anchors in the remaining three (3) holes. If required, roller track can be trimmed up to a maximum of 5" from the bottom.

The roller track plate must be plumb with the dock face. If not, use and weld (6) shims 2" wide x 25-5/8" long. Shims must be the full length of the roller track mounting plate. If shims are over 1/2" thick, use longer anchors. If shims need to be 1" thick or more, contact Systems, LLC Technical Services.'

Some levelers are slightly recessed within the pit and thus require a shim to be inserted between the roller track plate and the leveler front subframe and welded in place.

Note: Some mechanical dock levelers have an adjusting nut access hole in the leveler front subframe. If the TPR vehicle restraint roller track interferes with the access hole, the track plate must be cut to allow access.

Welding Instructions

Note: If the installation being worked on is a retrofit or replacement, make sure that the power source has been tagged and locked out according to OSHA regulations and approved local electrical codes, then remove the motor and limit switch connections from the control harness located in the outside junction box.

1. Disconnect power and ground leads to dock leveler (if equipped).
2. Place roller track at desired location, spaced 5/8" above the drive.
3. Plug weld all holes that are in contact with embedded steel. All fifteen (15) holes must be either plug welded or anchored.
4. Weld the sides of the roller track plate to the embed mounting plate with 4" long, 1/4" fillet welds.
5. Weld across top of roller track plate to curb steel or leveler frame with 3" long 1/4" fillet welds.
6. Once all welding has been completed, reconnect power and ground leads to dock leveler (if equipped).
7. Clean and touch up all welds once complete.

Anchor Installation

Note: Fifteen (15) concrete anchors are provided with each TPR vehicle restraint. An anchor must be installed in each roller track plate hole except for those plug-welded to embedded steel.

1. Using the roller track as a guide, drill holes of 5/8" diameter and minimum of 4-5/8" deep at all locations where roller track is not overlapping curb steel. Clean out holes.
2. Insert anchors and drive them flush with roller track plate, making sure that the threaded wedge is inserted first. Do not disassemble anchors prior to installation.
3. Once all anchors are installed, torque to 60 ft-lbs.

© 2026 Systems, LLC

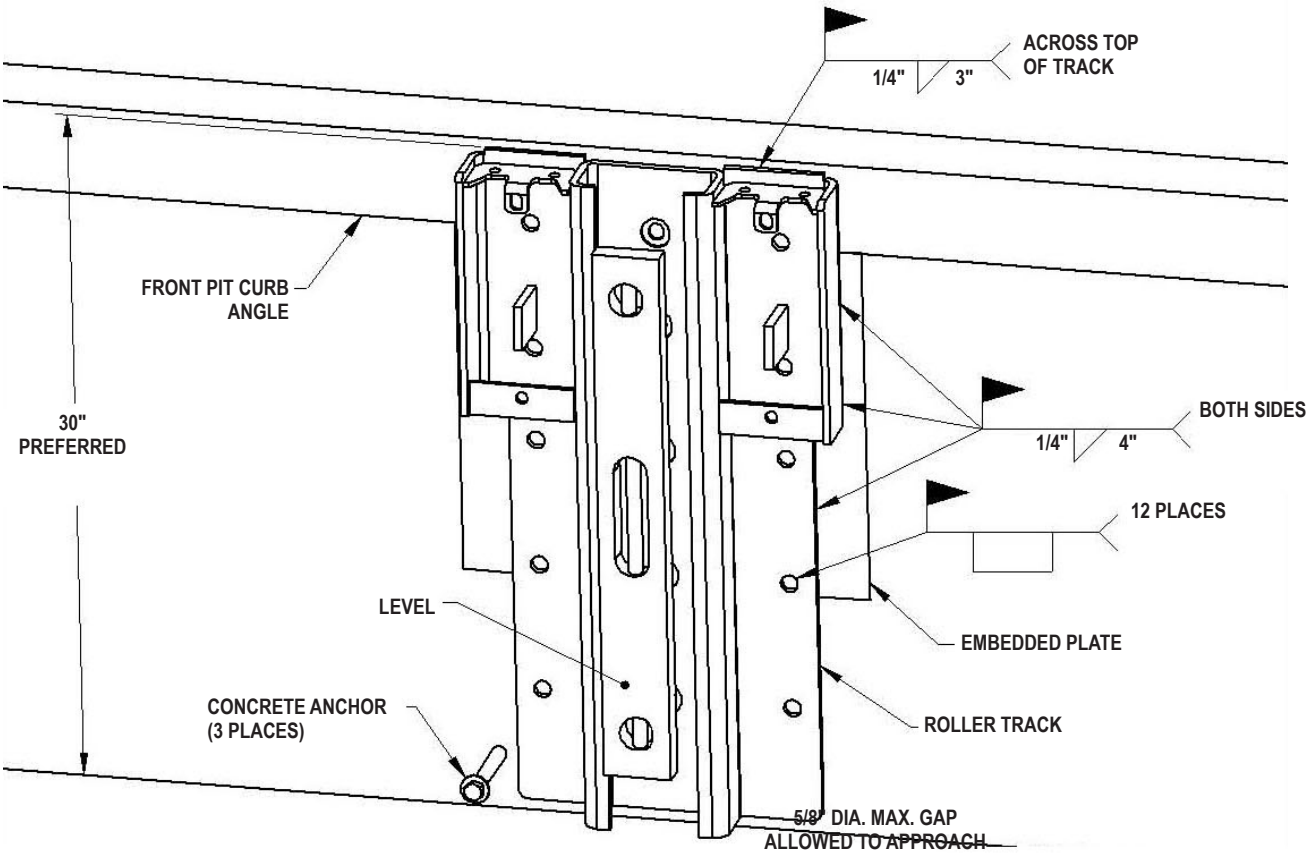

Figure 8

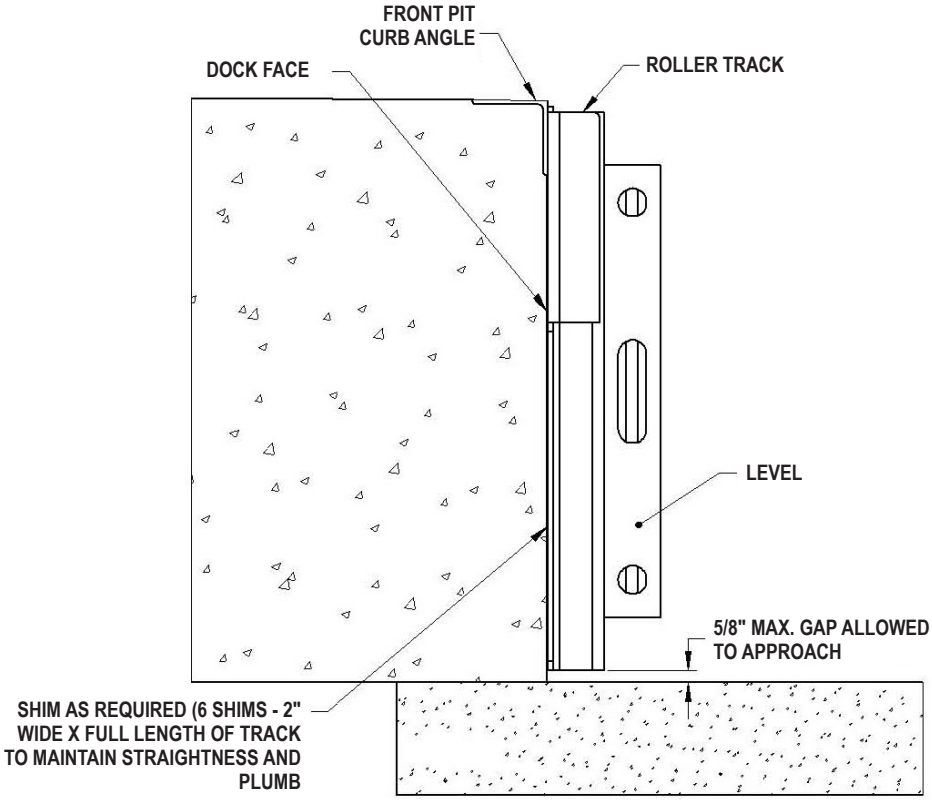

Figure 9

© 2026 Systems, LLC

Carriage Installation

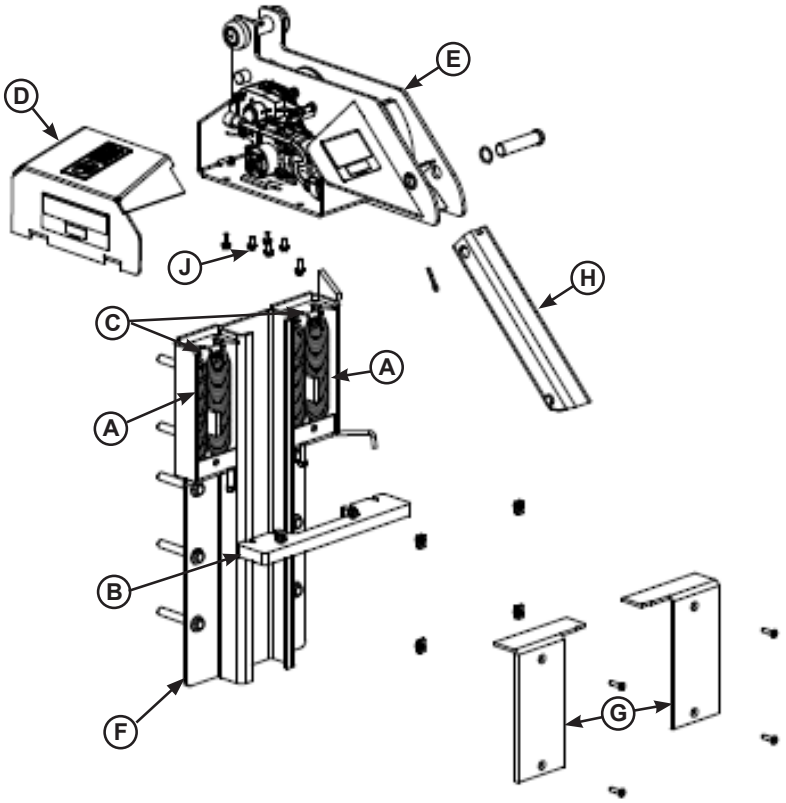

Figure 10

A— Extension Spring
B— Spring Mounting Plate Assembly
C— Spring Mounts
D— Motor Cover
E— Carriage Assembly
F— Roller Track
G— Spring Covers
H— Slope Extension
J— Nut, Carriage Mounting

⚠ CAUTION

Do not attempt to lift the carriage assembly by hand! Use a lifting device (e.g. crane, jack) when lifting the carriage (approx. 110 lbs.).

1. Attach the four (4) springs (**A**) to the lower spring bar (**B**).
2. Pull springs (**A**) upward and slide over top spring mounts (**C**) on the track roller plate.
3. Remove motor cover (**D**).
4. Slide the carriage assembly (**E**) into the roller track (**F**), position and secure the lower spring bar (**B**) to the bottom of the TPR carriage with mounting nuts (J).
5. Install right and left spring covers (**G**) with clip nuts and flat head screws provided.
6. Install the motor cover (**D**).
7. Install slope extension (**H**).

© 2026 Systems, LLC

Install Control Panel and Wiring

DANGER

Make sure that the power source has been locked out and tagged according to OSHA regulations and approved local electrical codes.

WARNING

A hard hat or other applicable head protection should always be worn when working under or around a dock leveler.

Always stand clear of platform lip when working in front of the dock leveler.

CAUTION

All electrical work — including the installation of the disconnect panel, control panel, and final connections to the pit junction box — must be performed by a certified electrician and conform to all local and applicable national codes.

NOTICE

DO NOT connect any dock equipment electrical wiring or ground connections until all welding has been completed.

DO NOT ground welding equipment to any electrical components of the dock equipment. Always ground welding equipment to the dock leveler frame, NEVER to the platform.

Failure to follow these instructions may damage the motor, wiring, and/or control panel.

NOTICE

Where indicated, all components must be connected to a SAFETY EARTH GROUND that conforms to the 1999 National Electrical Code Section 250-50 section (a) or section (c) for a grounding electrode system.

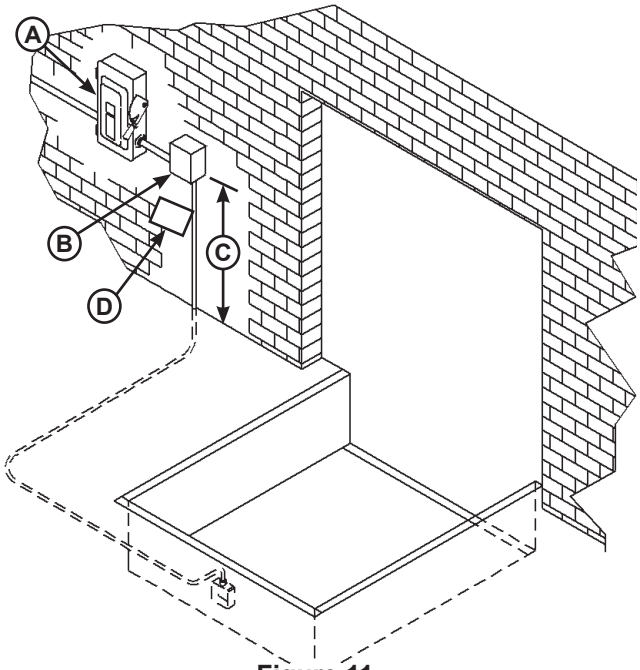

Figure 11

A— Disconnect Panel (provided by others)
B— Control Panel
C— Distance, 48 in. (1219 mm)
D— Placard

1. Mount the control panel (**B**) so bottom of control panel-to-dock floor distance is 48 in. (1219 mm, **C**).

2. Install electrical disconnect panel (**A**) if not already installed (provided by others). It is recommended to locate disconnect panel adjacent to control panel (**B**).

3. Install and connect the control wiring as shown in installation drawings.

4. Connect the control wiring to the field wires in the dock equipment junction boxes. Refer to the electrical diagrams supplied with the dock equipment.

Note: When installing electrical controls in a temperature-controlled environment, the installer must determine an appropriate means to isolate/prevent thermal and vapor transfer through electrical conduit, where conduit routing crosses temperature zones. Systems, LLC is not responsible for any damage due to moisture collecting inside the control panel caused by improper isolation/prevention of thermal and vapor transfer through the conduit. Refer to Tech Service Bulletin 19-053 for more information.

5. Install placard (**D**). Make sure placard is in plain view of dock leveler and/or vehicle restraint operations. Suggested placement of placard is near control box attached to electrical conduit by using nylon cable tie. See page 18.

© 2026 Systems, LLC

Placard Installation Instructions

1. Installers and/ or Owner's/ User's are responsible for the installation and placement of product placards.
2. Placard must be in plain view of dock leveler and/ or vehicle restraint operations.
3. Suggested placement of placard is near control box, attached to the wall or electrical conduit using a cable tie. If the equipment does not have a control panel, mount the placard on the wall to the immediate left of leveler at eye level.

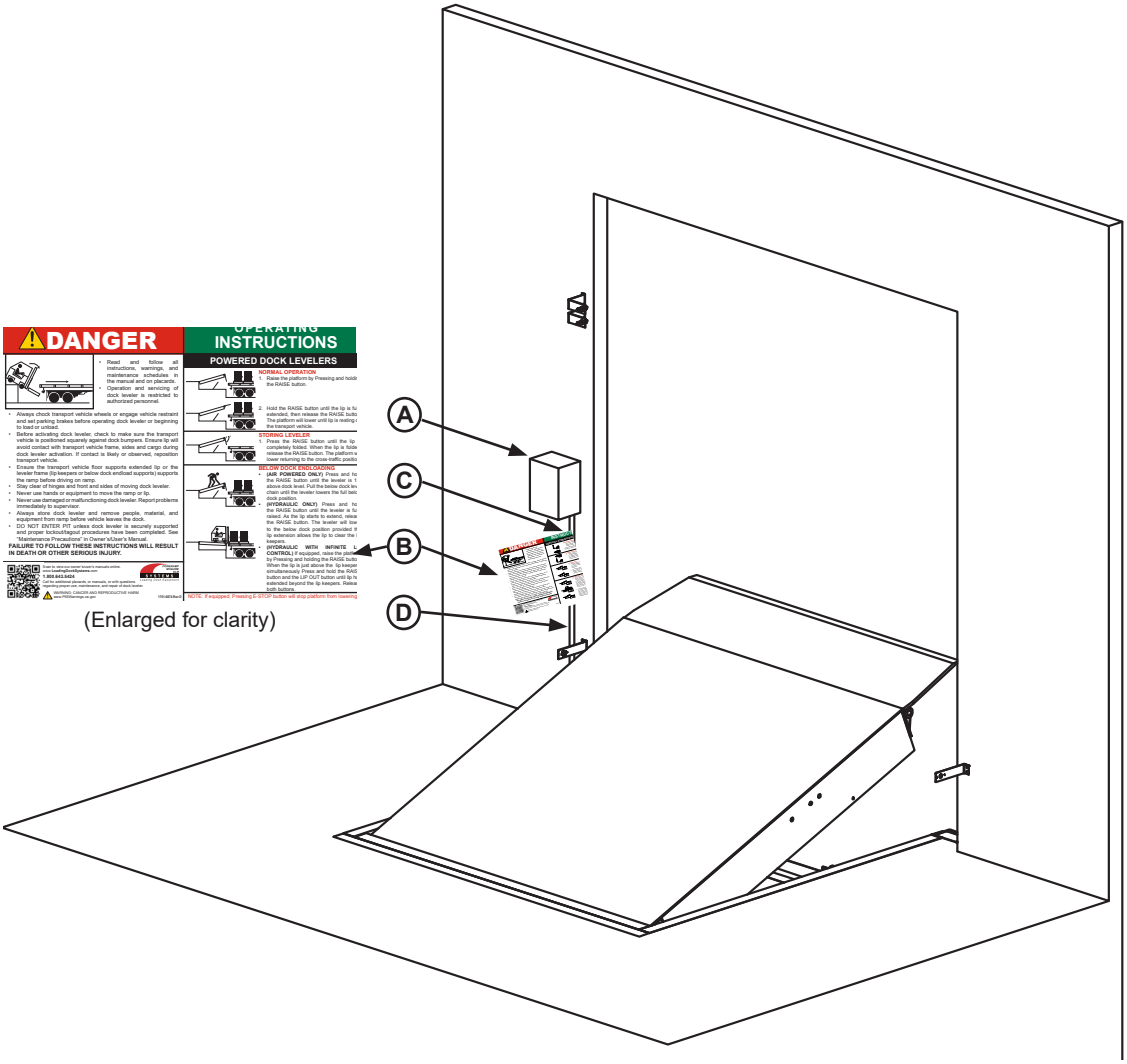

Figure 12

A—Control Box **B— Placard** **C— Nylon Cable Tie** **D— Conduit**

© 2026 Systems, LLC

Operational Precautions

⚠DANGER

Stay clear of dock leveler and vehicle restraint when transport vehicle is entering or leaving dock area.

DO NOT move or use the dock leveler or restraint if anyone is under or in front of leveler.

Keep hands and feet clear of pinch points. Avoid putting any part of your body near moving parts.

⚠WARNING

Only trained personnel should operate the dock leveler and vehicle restraint.

DO NOT use a broken or damaged dock leveler or vehicle. Make sure proper service and maintenance procedures have been performed on the equipment before using.

Transport vehicle wheels must be chocked unless the vehicle restraint is used. Never remove the wheel chocks until loading/unloading is finished and transport vehicle driver has been given permission to leave.

Make sure platform lip rests on the transport vehicle bed with at least 4 in. (102 mm) of overlap.

Maintain a safe distance from side edges of leveler during the loading/unloading process.

⚠WARNING

Once the vehicle restraint has been activated, the dock attendant must visually inspect to assure that the restraint hook has properly engaged the Rear Impact Guard (RIG) bar.

© 2026 Systems, LLC

OPERATION

Operation - Normal

1. Check that the transport vehicle is positioned squarely against both dock bumpers.
See Figures 13 and 14.
- Inside light - RED
- Outside light - GREEN

2. Push ENGAGE button to activate restraint.
- Inside lights - AMBER
- Outside light - RED

3. Restraint will ENGAGE on transport vehicle RIG. (See Figure 14)

- Inside light - GREEN
- Outside light - RED

4. Visually inspect restraint for proper engagement.

5. Position dock leveler onto transport vehicle.

6. When loading or unloading is complete, return dock leveler to the stored position.

7. Push RELEASE button to store restraint.
- Inside lights - AMBER
- Outside light - RED

8. Transport vehicle can now depart.
- Inside light - RED
- Outside light - GREEN

Operation - Auto Re-Engage

Note: Auto Re-Engage requires an iDock Control System. Units without an iDock Control System do not have this functionality.

After restraint has been engaged with successful capture of RIG bar, these restraints will automatically attempt to re-engage if they leave the working zone:

TPR/UniLock

- When restraint hook is rotated below the working zone during loading/unloading, the controls will automatically attempt to re-engage the hook one (1) time.
  - If hook successfully captures the RIG bar again, the light communication will remain the same:
    - Inside light - GREEN
    - Outside light - RED
  - If hook is unable to re-engage after one (1) attempt, the hook will remain in it's current position. The iDock Control System will alert the operator with communication lights and message shown below:
    - Inside light - RED
    - Outside light - RED

5 REENGAGEMENT FAILURE
CHECK RESTRAINT AND TRY AGAIN

(alternating messages)

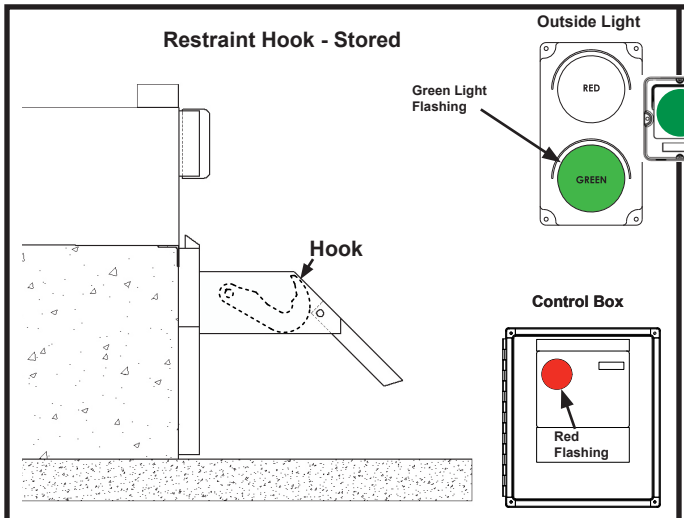

Figure 13

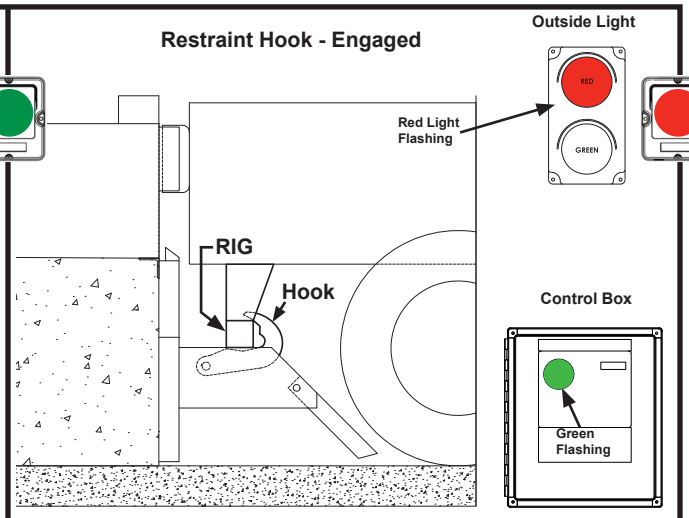

Figure 14

© 2026 Systems, LLC

Operation - Bypass

If the trailer RIG (Rear Impact Guard) is damaged or missing, dock leveler can be used in BYPASS. (See Figure 15)

1. Secure transport vehicle wheels by other means.

2. Activate BYPASS mode through menu screens under OPERATION MODE.
- Inside light - GREEN & AMBER
- Outside light - RED

3. Position dock leveler onto transport vehicle trailer.

4. When loading or unloading is complete, return dock leveler to the stored position.

5. Reset BYPASS mode to NORMAL mode by pressing the RELEASE button once, or through menu screens under OPERATION MODE.
- Inside light - RED
- Outside light - GREEN

6. Release the transport vehicle wheels when transport vehicle is ready to depart.

Operation - Bypass From Unsuccessful Engage

If the restraint fails to successfully ENGAGE a trailer RIG, the hook will automatically return to the stored position. See Figure 16.

- Inside light - AMBER & RED
- Outside light - RED

Bypass mode can then be activated by pressing ENTER button (user code may be required).
- Inside light - GREEN & AMBER
- Outside light - RED

Or, to reset back to NORMAL mode, press RELEASE button.
- Inside light - GREEN
- Outside light - RED

See the iDock Owner's/User's Manual for more information on iDock menus and navigation.

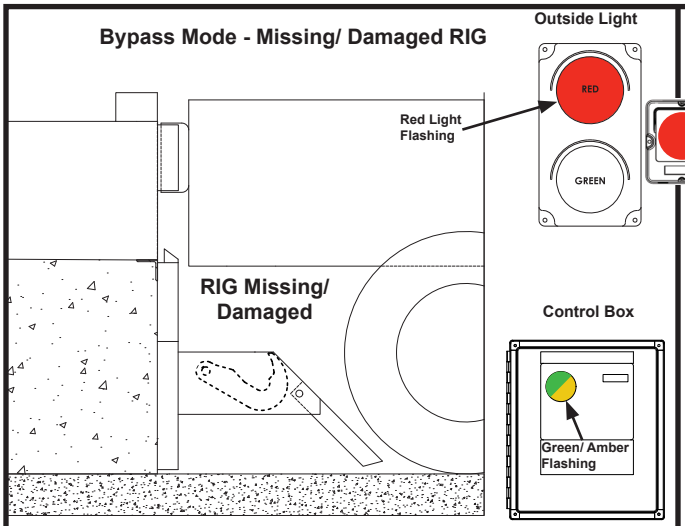

Figure 15

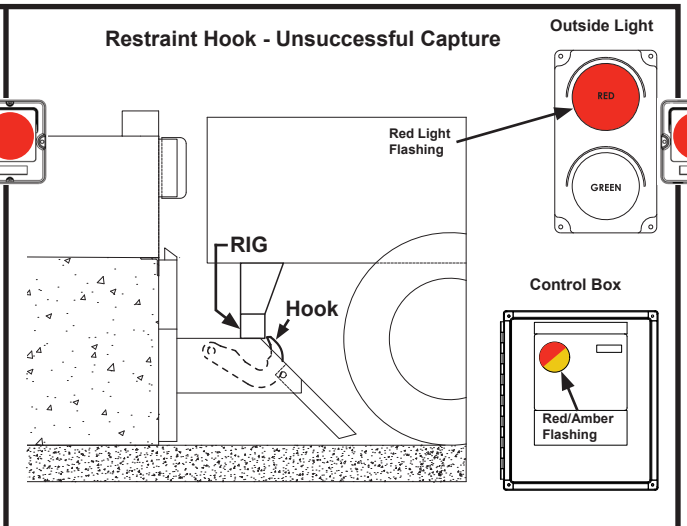

Figure 16

© 2026 Systems, LLC

Multi-Colored & Outside Light Sequence Charts

Normal Operation

Condition	Lights	
	Inside	**Outside**
Ready For Use	Red	Green
Leveler Operating or Restraint Engaging/Releasing In Progress	Amber	Red
Restraint Engaged	Green	Red
Restraint Engage Failure	Red/Amber, Display Backlight Flashes	Red
Emergency Stop Active	Red (solid)*	Red (solid)

**If equipped, Audible Alarm will also be active.*

Bypass Mode

Condition	Lights	
	Inside	**Outside**
Restraint Engage Failure (Bypass Mode prompt)	Red/Amber, Display Backlight Flashes	Red
Bypass Mode	Green/Amber	Red
Reset Attempted (Leveler in Use)	Red/Amber, Display Backlight	Red
Reset Attempted (Door Open)	Green/Amber, Display Backlight	Red
Reset Lights to Normal Mode	Red, Display Backlight (5 seconds)	Green

Menu & Diagnostics (iDock Controller Only)

Condition	Lights	
	Inside	**Outside**
Main Menu Active	Red (solid)	Red (solid)
System Fault Present	Red/Amber	Red
Restraint Use Disabled	Amber	None
Restraint Engaged with Leveler Stored (*Requires Leveler Stored Switch*)	Green/ Amber	Red

© 2026 Systems, LLC

Restraint Capture Zones

NOTICE

Triple Range hook provides Primary and Secondary RIG capture zones for standard, pentagonal and reinforced RIGs that do not have plates.

Primary capture zone enables control box GREEN light operation.

Secondary capture zone warns Dock Attendant of unsafe condition via control box RED light and AMBER light.

⚠WARNING

Secondary capture zone warns of unsafe condition via control box RED light, optional Audible Alarm and message display.

Dock Attendant shall stop loading/ unloading process when restraint is in secondary capture zone, until transport vehicle is positioned against bumpers and hook is engaged again in primary capture zone.

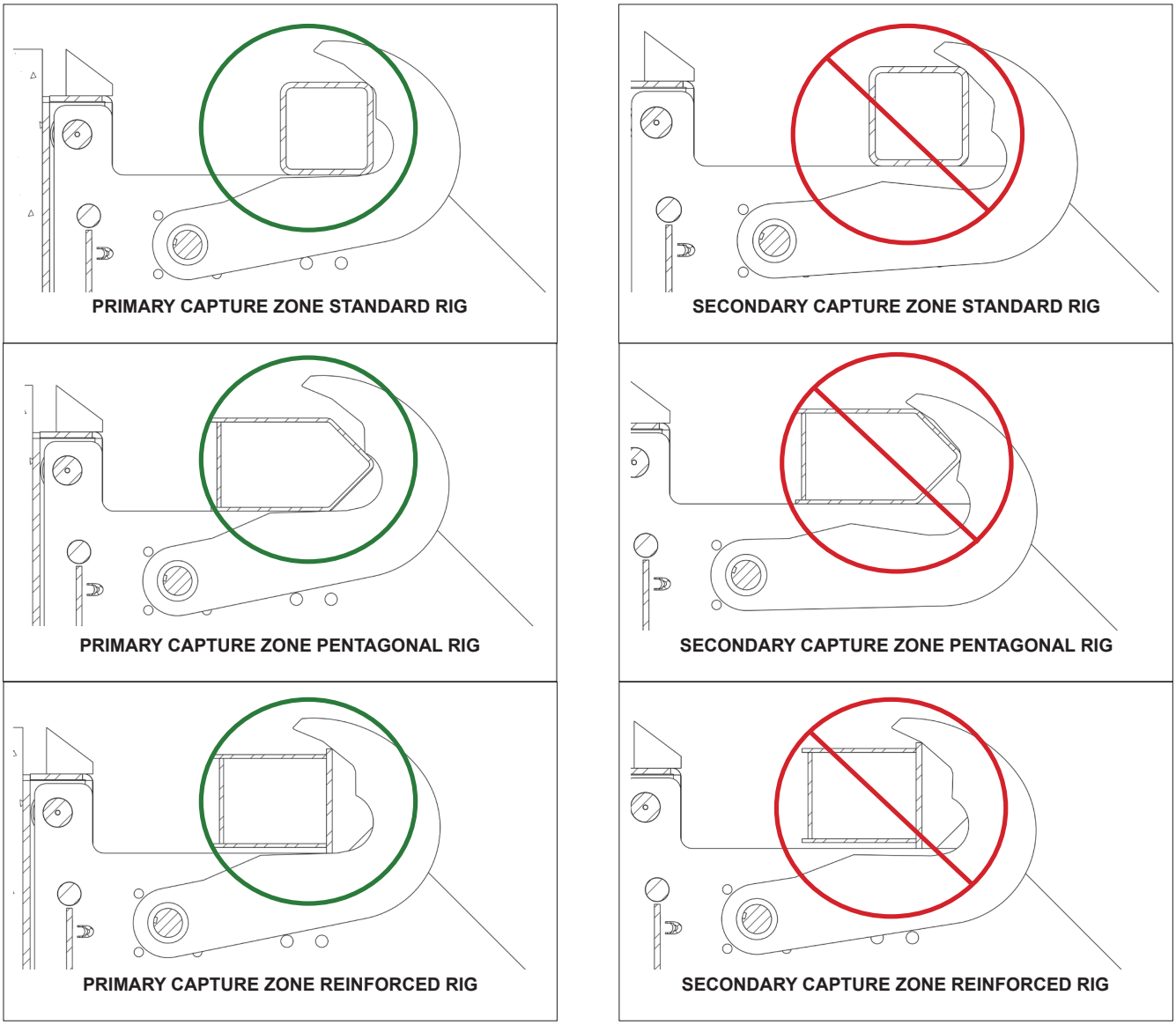

Figure 17

© 2026 Systems, LLC

MAINTENANCE

Maintenance Precautions

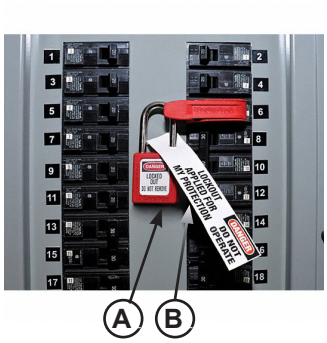

Figure 18

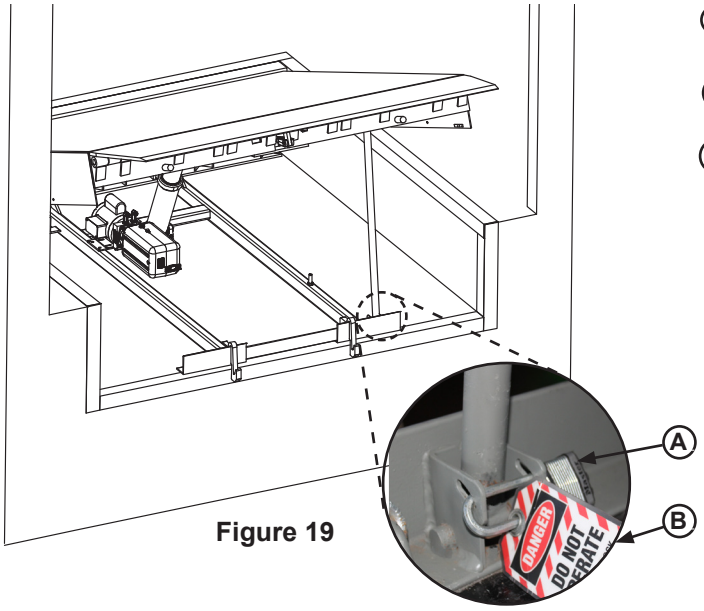

Figure 19

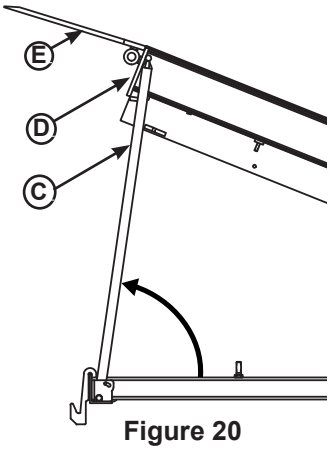

Figure 20

A — Lock Out Device
B — Tag Out
C — Maintenance Prop
D — Header plate
E — Lip plate

DANGER

Unless the dock leveler is equipped with a tethered remote, two people are required to engage the maintenance prop: one person to operate the unit, the other person to engage the maintenance prop.

In addition, it is recommended and good safety practice to use an additional means to support the dock platform and lip anytime when physically working in front of or under the dock leveler. This additional means may include, but is not limited to a boom truck, fork truck, stabilizing bar or equivalent.

WARNING

Always post safety warnings and barricade the work area at dock level and ground level to prevent unauthorized use of the unit before maintenance is complete.

When working with electrical or electronic controls, make sure that the power source has been tagged (B) and locked out (A) according to OSHA regulations* and approved local electrical codes (see Figure 18).

Whenever maintenance is to be performed under the dock leveler platform, support the platform with maintenance prop (**C**). Position the maintenance prop behind front header plate (**D**) while staying clear of the lip. The lip will fold down after the platform has rested on the maintenance prop. Lock the maintenance prop in the service (upright) position using an OSHA approved lockout device* (**A**) and tag out device* (**B**). See Figures 19 and 20.

Only the person servicing the equipment should have the capability to remove the lockout devices. The tag out devices* must inform that repairs are in process and clearly state who is responsible for the lockout condition.

WARNING

A hard hat or other applicable head protection should always be worn when working under or around a dock leveler.

Always stand clear of platform lip when working in front of the dock leveler.

** Refer to OSHA regulations 1910.146. Confined Space and 1910.147. Lockout/Tagout*

© 2026 Systems, LLC

Periodic Maintenance

Daily Maintenance

- Verify that all inside and outside signal lights and alarm (if equipped) work correctly.

Weekly Maintenance

- Operate the vehicle restraint through the complete operating cycle to maintain lubrication.
- Remove debris around TPR vehicle restraint and in roller track.
- Verify carriage assembly is able to move up and down freely with no binding or obstruction.
- Inspect motor and spring covers.
- Inspect warning decals and placards. Replace if damaged or missing

Quarterly Maintenance

- Complete Weekly Maintenance.
- Inspect the following for damage/abnormal wear:
  - Check welds for cracks.
  - Check motor mount bolts.
  - Check J-box for water damage.
  - Control box and conduit for damage.
  - Bumpers for more than 1" of wear. Replace worn, loose, damaged or missing bumpers.
- Lubricate the rollers at the fittings located on the top and bottom axle with a synthetic oil-base moly grease with a temperature range of –40° to 170° F.
- Inspect chain tension, verify 1/8-1/4 inch of play.
- Lubricate drive chain and limit switch mounting bracket between drive sprocket and cam with a synthetic oil-base moly grease with a temperature range of –40° to 170° F.
- Verify brake torque is greater than 42 ft-lbs and less than 58 ft-lbs at the hook shaft, while rotating the hook from ENGAGED (45 deg) to STORED.
- Check that all concrete anchor bolts are torqued to 60 ft-lbs.

© 2026 Systems, LLC

Drive Chain & Brake Torque Adjustments

DANGER

It is recommended and good safety practice to use an additional means to support the dock platform and lip anytime when physically working in front of or under the dock leveler. This additional means may include, but is not limited to a boom truck, fork truck, stabilizing bar or equivalent.

WARNING

Always post safety warnings and barricade the work area at dock level and ground level to prevent unauthorized use of the dock leveler before maintenance is complete.

A hard hat or other applicable head protection should always be worn when working under or around a dock leveler.

Always stand clear of platform lip when working in front of the dock leveler.

Drive Chain Adjustment

Inspect the drive chain periodically for dirt and chain slack. Open the motor enclosure and clean the chain with solvent. After cleaning, spray with a high quality chain spray type lubricant.

The drive chain should not have more than 1/4" slack (see Figures 21 and 22). To tighten chain:

1. Open motor enclosure and loosen the four (4) motor mounting bolts.
2. Pry the motor assembly forward, in the slotted holes, until the chain is tight with proper alignment between sprockets.
3. Hold in this position and tighten the four (4) motor mounting bolts to 96 in-lbs in 10 in-lb increments.

Brake Torque Adjustment

If the hook is dropping from the engaged to stored position with very little effort, or seems like it is binding and takes an unusually high amount of effort, a brake torque adjustment may be required.

Verify brake torque is greater than 42 ft-lbs and less than 58 ft-lbs at the hook shaft, while rotating the hook from ENGAGED (45 deg) to STORED (see Figures 21 and 22):

1. Loosen brake adjuster locknut while holding the adjuster screw to prevent inadvertent adjustment.
2. Turn adjuster screw clockwise to increase brake torque as needed.
3. Tighten adjuster locknut while holding the adjuster screw to prevent inadvertent adjustment.
4. Verify brake torque is greater than 42 ft-lbs and less than 58 ft-lbs at the hook shaft, while rotating the hook from ENGAGED (45 deg) to STORED; readjust as required.

© 2026 Systems, LLC

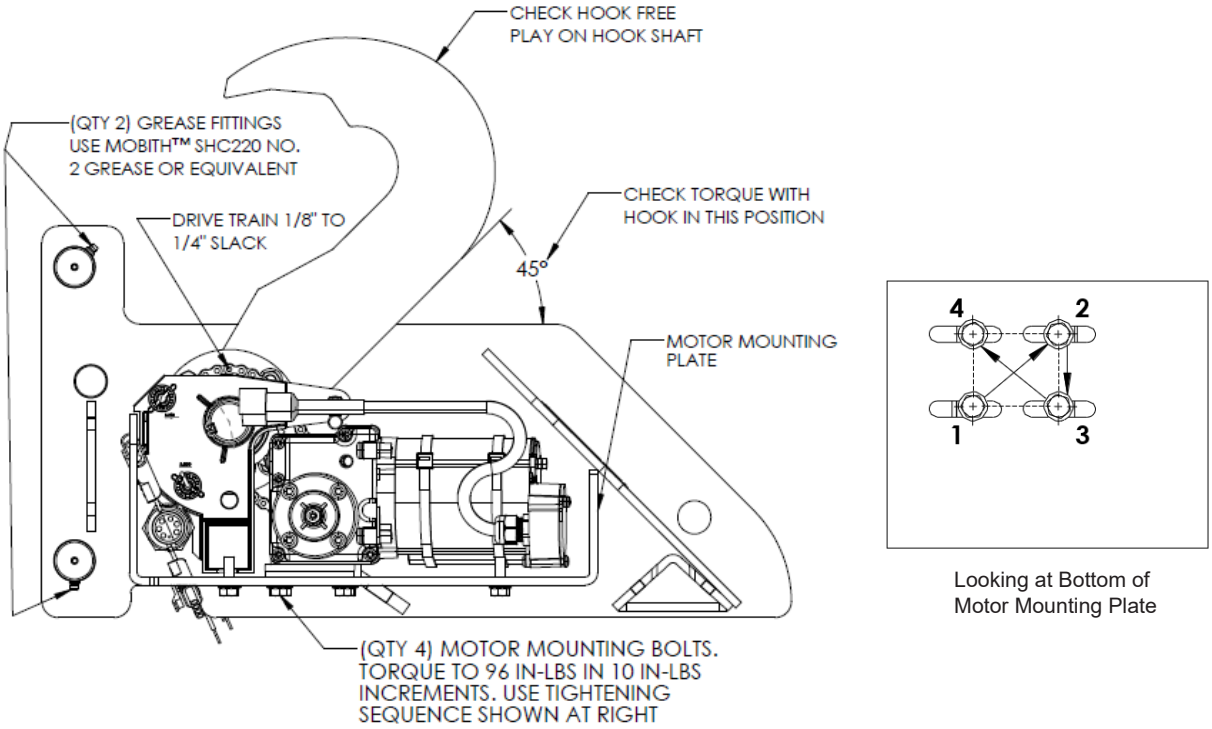

Figure 21

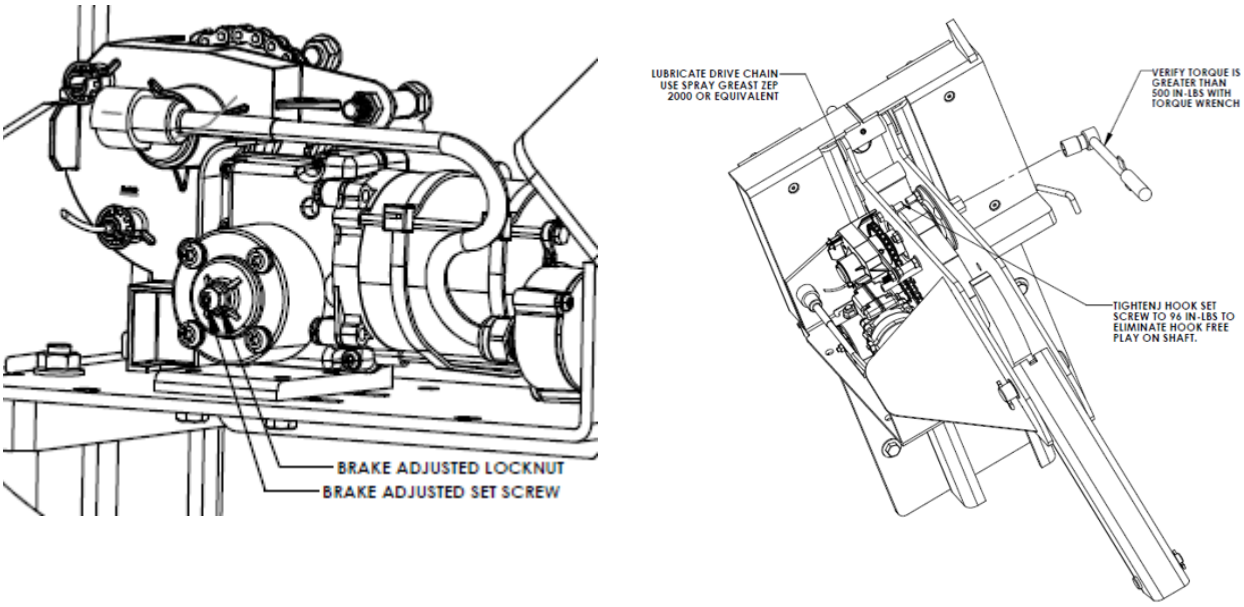

Figure 22

© 2026 Systems, LLC

Adjust Dock Leveler and Vehicle Restraint Interlock

Dock Leveler & Vehicle Restraint Interlock Options

There are two options to interlock the dock leveler and vehicle restraint*:

- Restraint Engage before Leveler Operate (RELO) Interlock: Dock leveler can be interlocked with a vehicle restraint to prevent the leveler from operating until the restraint has engaged the transport RIG (Rear Impact Guard) when the OPERATION MODE is NORMAL and has NOT been switched to BYPASS MODE.

- Leveler Stored before Restraint Release (LSRR) Interlock: Vehicle restraint is interlocked with the dock leveler so that the restraint cannot be operated until the leveler is stored in the cross traffic position (lip fully folded, inside the keepers, and the platform level with the dock floor).

Interlocking is overridden when the OPERATION MODE is in BYPASS. This allows the independent operation of the leveler (the restraint cannot be operated in BYPASS MODE).

Pressing the restraint RELEASE button when in BYPASS mode will return the leveler to NORMAL operating mode.

Special interlocking options are available upon request. Call Systems, LLC to discuss interlock options to meet your specific needs.

*Dock levelers equipped with Auto-Return-To-Dock have limited interlocking options. Auto-Return-To-Dock feature is not available for dock levelers equipped with combination dock leveler/vehicle restraint control panels.

© 2026 Systems, LLC

Adjust Dock Leveler and Vehicle Restraint Interlock

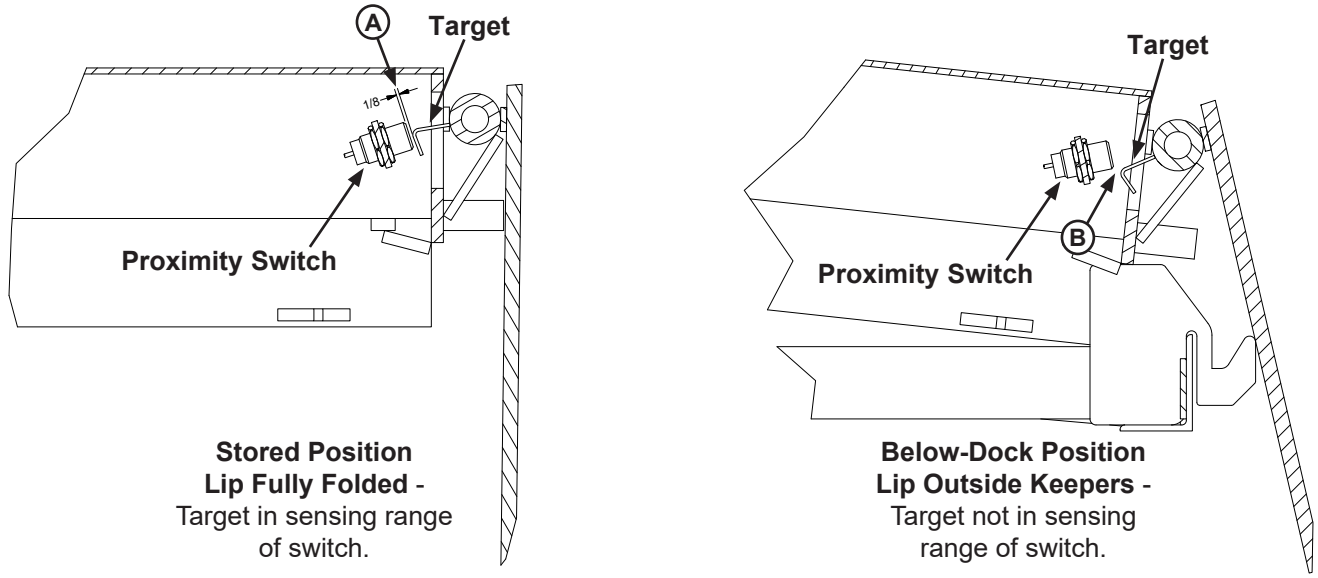

Figure 23

1. The dock leveler should be in the cross traffic position before beginning tests.

2. Back a transport vehicle with RIG bar into dock. A test fixture may be used to simulate the RIG bar. Use care to avoid damage to the equipment or harm to the operator.

3. Press the RAISE button. The dock leveler should NOT raise. If the leveler did not raise, proceed with step 4. If the leveler did raise, decrease dimension (**A**), so that the target is in the sensing range of the switch. Typical factory setting for (**A**) is approximately 1/8". Make adjustments at switch until leveler does not raise when the vehicle restraint is not engaged on transport vehicle RIG bar. See Figure 23.

4. Momentarily press the ENGAGE button. The vehicle restraint automatic engage cycle will be activated and the restraint will engage the transport vehicle RIG bar.

5. Raise the dock by pressing the RAISE button until the lip is fully extended. Release the RAISE button. The leveler will drop to the floor of the transport vehicle. If a RIG test fixture is used it should allow the leveler to drop to the full below dock position without the contact between the lip and test fixture.

6. Press the RELEASE button. The vehicle restraint should NOT disengage from the transport vehicle RIG bar or test fixture. If the vehicle restraint did NOT disengage, proceed with Step 7. If the vehicle restraint DID disengage, move the switch farther from the target or bend the target to increase dimension (**B**) so that the target is not in the sensing range of the switch. Make adjustments at switch and/or target until vehicle restraint does not disengage transport vehicle. See Figure 23.

Note: If adjustments are required in this step, make sure that the interlocking described in Step 3 is still in effect after Step 6 adjustments are complete.

7. Press the RAISE button. The dock leveler will raise. The leveler lip will fold as the platform raises. When the lip is fully folded, release the RAISE push button. The leveler will descend to the cross traffic position.

8. Momentarily press the RELEASE button. The vehicle restraint will return to the stored position.

NOTICE

Work lip by hand when making adjustments to make sure that target does NOT contact switch as lip extends.

© 2026 Systems, LLC

Magnetic Switch Test Procedure (October 2026 and Later)

If the MS1 and/or MS2 switch is suspected to be faulty, the switch can be tested with a multimeter.

1. Turn OFF all electrical power to the restraint.
2. Remove motor cover.
3. Unplug Mag Switch Connector from main harness. Then remove mag switch housing and magnet arm. Reference Parts Diagram on Page 36 for Disassembly/Assembly.
4. Set multimeter to Ohms (continuity test).
5. Attach multimeter leads to pins “A” and “B” for **Magnetic Switch 1.** Figure 28. This contact is normally open and closes when the magnet (D) is near the sensor (C). Figure 29.
6. Attach multimeter leads to pins “C” and “D” for **Magnetic Switch 2.** Figure 28. This contact is normally open and closes when the magnet (D) is near the sensor (E). Figure 29.
7. With the magnet near sensor, there should be a resistance reading. With the magnet away from sensor, there should be no meter reading.

Note: A continuity test lamp may be used instead of a multimeter.

Hook Position	MS1 Contact	MS2 Contact	Inside	Outside
Stored	Closed (Magnet Present)	Open (No Magnet)	Red	Green
No Capture (Under-Travel)	Open (No Magnet)	Open (No Magnet)	Red & Amber*	Red
Hooked (Approx. 90°)	Open (No Magnet)	Closed (Magnet Present)	Green	Red
No Capture (Over-Travel)	Open (No Magnet)	Open (No Magnet)	Red & Amber*	Red
* Audible Alarm (if equipped)				

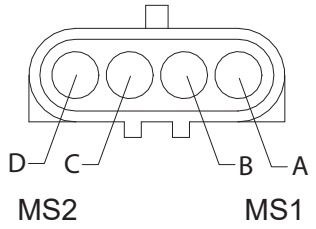

Figure 28

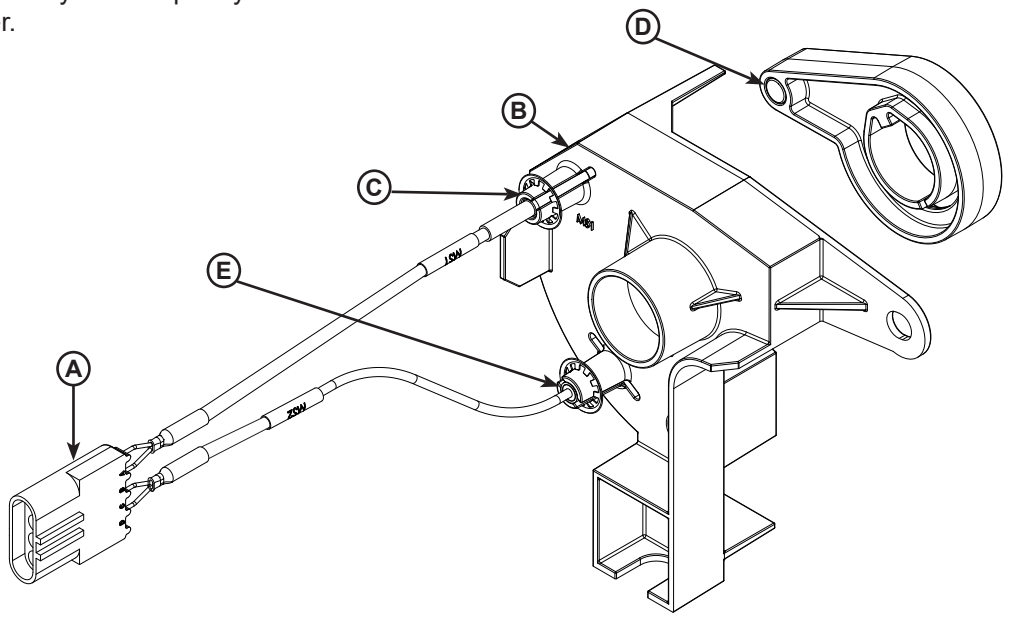

Figure 29

A — Connector, 4-Pole
B — Sensor Assembly
C — MS1 Location
D — Target, Magnet Holder
E — MS2 Location

© 2026 Systems, LLC

TPR Harness Wire Identification (October 2026 and Later)

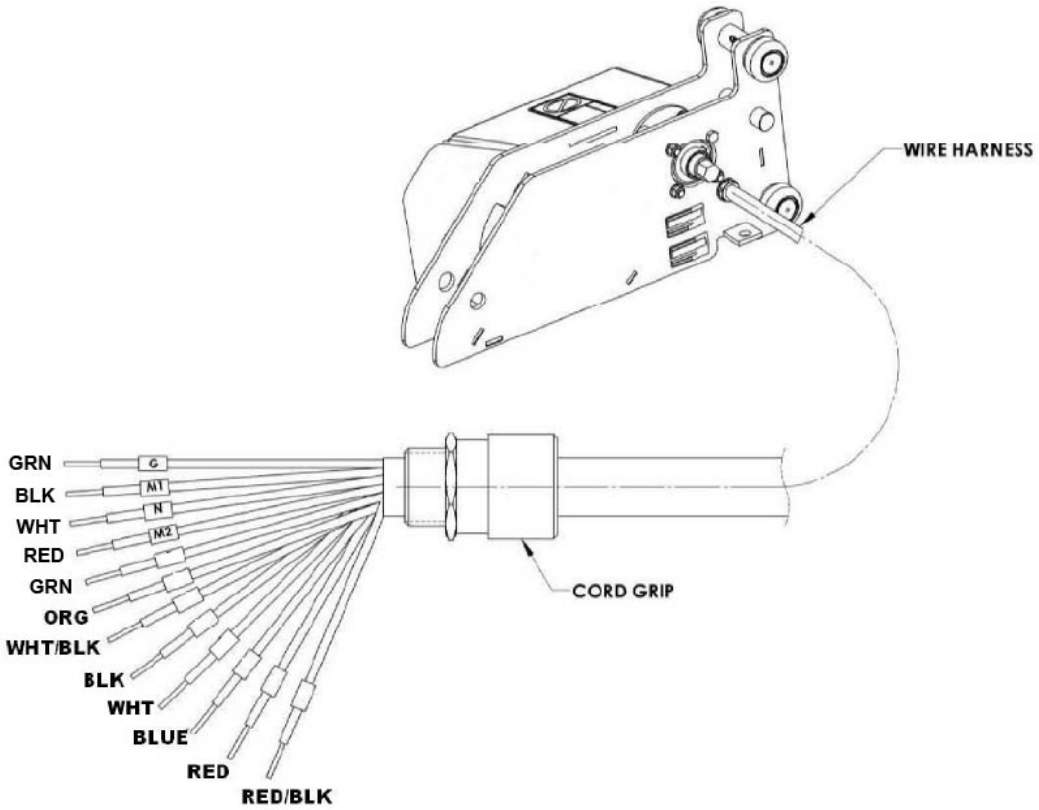

Figure 30

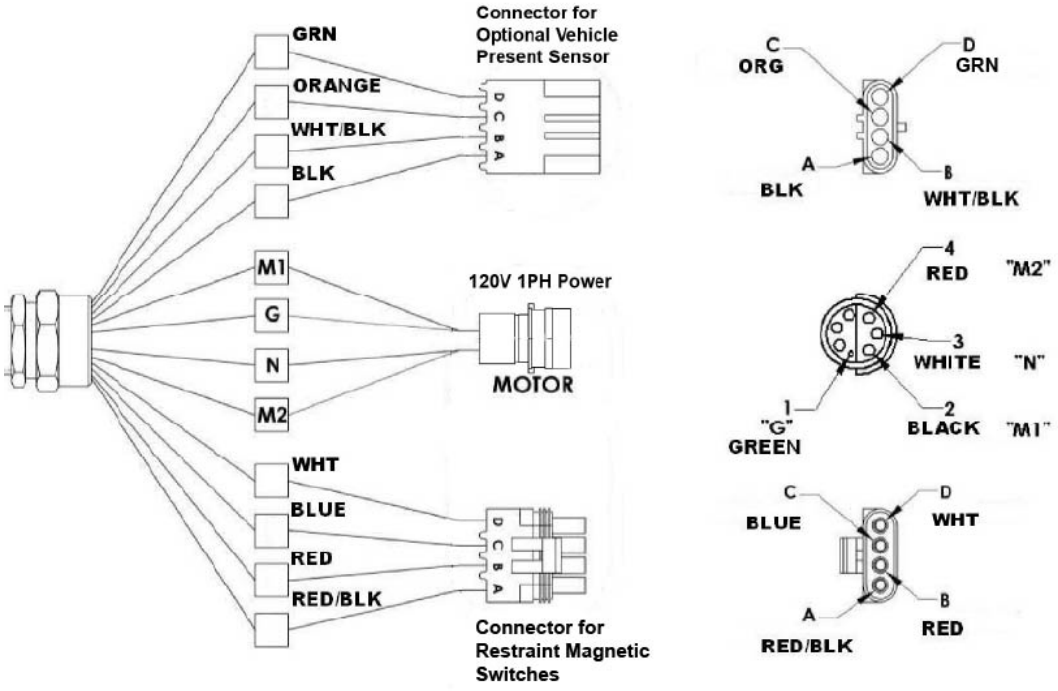

Figure 31

© 2026 Systems, LLC

TROUBLESHOOTING

TPR Troubleshooting

⚠ DANGER

Unless the dock leveler is equipped with a tethered remote, two people are required to engage the maintenance prop: one person to operate the unit, the other person to engage the maintenance prop.

In addition, it is recommended and good safety practice to use an additional means to support the dock platform and lip anytime when physically working in front of or under the dock leveler. This additional means may include, but is not limited to a boom truck, fork truck, stabilizing bar or equivalent.

⚠ WARNING

When service under the dock leveler is required, always lock all electrical disconnects in the OFF position after raising the platform and engaging the maintenance prop.

Always post safety warnings and barricade the work area at dock level and ground level to prevent unauthorized use of the dock leveler before maintenance is complete.

A hard hat or other applicable head protection should always be worn when working under or around a dock leveler.

Always stand clear of platform lip when working in front of the dock leveler.

Note: If your system is equipped with an iDock controller, reference the iDock Owner's and User manual for a list of fault codes and possible solutions.

Before performing the detailed troubleshooting procedures, check the following items first:

- Check all fuses inside the control panel(s). Replace any blown fuse(s) with a fuse of equal specification.
- Make sure the correct voltages are present at the proper locations inside the control panel(s).

Symptom	Possible Cause	Solution
TPR vehicle restraint lights do not flash, and the hook does not raise.	Power source malfunction.	Check for blown fuse at branch circuit disconnect.
	Incorrect wiring.	Verify electrical schematics.
TPR vehicle restraint lights are flashing, but the hook does not raise or lower to full extent.	Chain is loose or broken.	Adjust or replace as required.
	Low incoming voltage.	Verify incoming power at L1 and L2.
	Drive motor faulty.	Check motor, repair or replace.
	Incorrect wiring.	Verify wiring per electrical schematic.
	Incorrect brake torque.	Brake torque should greater than 42 ft-lbs.

© 2026 Systems, LLC

Symptom	Possible Cause	Solution
TPR vehicle restraint is operational, but the hook drops while the transport vehicle is being serviced, causing the lights and/or horn to change.	Verify brake torque.	If brake torque is less than 42 ft-lbs, or chain is loose or broken, adjust or replace as required.
	Drive motor faulty.	Check motor. Repair or replace as needed.
TPR vehicle restraint is operational, but all lights are out.	Faulty LED lights.	Check and replace LED lights as needed.
	Faulty flasher. (Non-iDock only)	Check flasher; if bad replace.
	Check 3A midget fuse (Non-iDock only)	Check fuse for continuity and replace if failed.
TPR vehicle restraint alarm does not sound, but hook and lights are operational.	Faulty alarm.	Power alarm using 12V DC; if no sound replace alarm.
TPR vehicle restraint lights not working in correct order.	Incorrect wiring.	Verify all field wiring connections are correct.
	Inside red light does not change.	Defective LS1/MS2.
	Outside lights and inside green light do not change.	Defective LS2/MS1.
TPR vehicle restraint carriage does not return to full up position.	Broken or weak springs.	Replace all springs.
	Damaged roller track plate.	Verify that the roller track plate is straight and not binding or catching.
	Carriage binding in track.	Clean debris out of roller track and/or verify roller bearings are greased and move freely.
TPR does not release.	Excessive outward transport vehicle force.	Back trailer up against both bumpers and Press RELEASE again.
	Motor or chain failure.	Inspect motor and chain; repair or replace as required.

If additional troubleshooting assistance is required, contact Systems, LLC Technical Services with equipment serial number or customer order number (CO#).

Technical Service at 800-643-5424 or techservices@loadingdocksystems.com

© 2026 Systems, LLC

TPR26 Carriage Assembly (MAGNETIC SWITCHES)

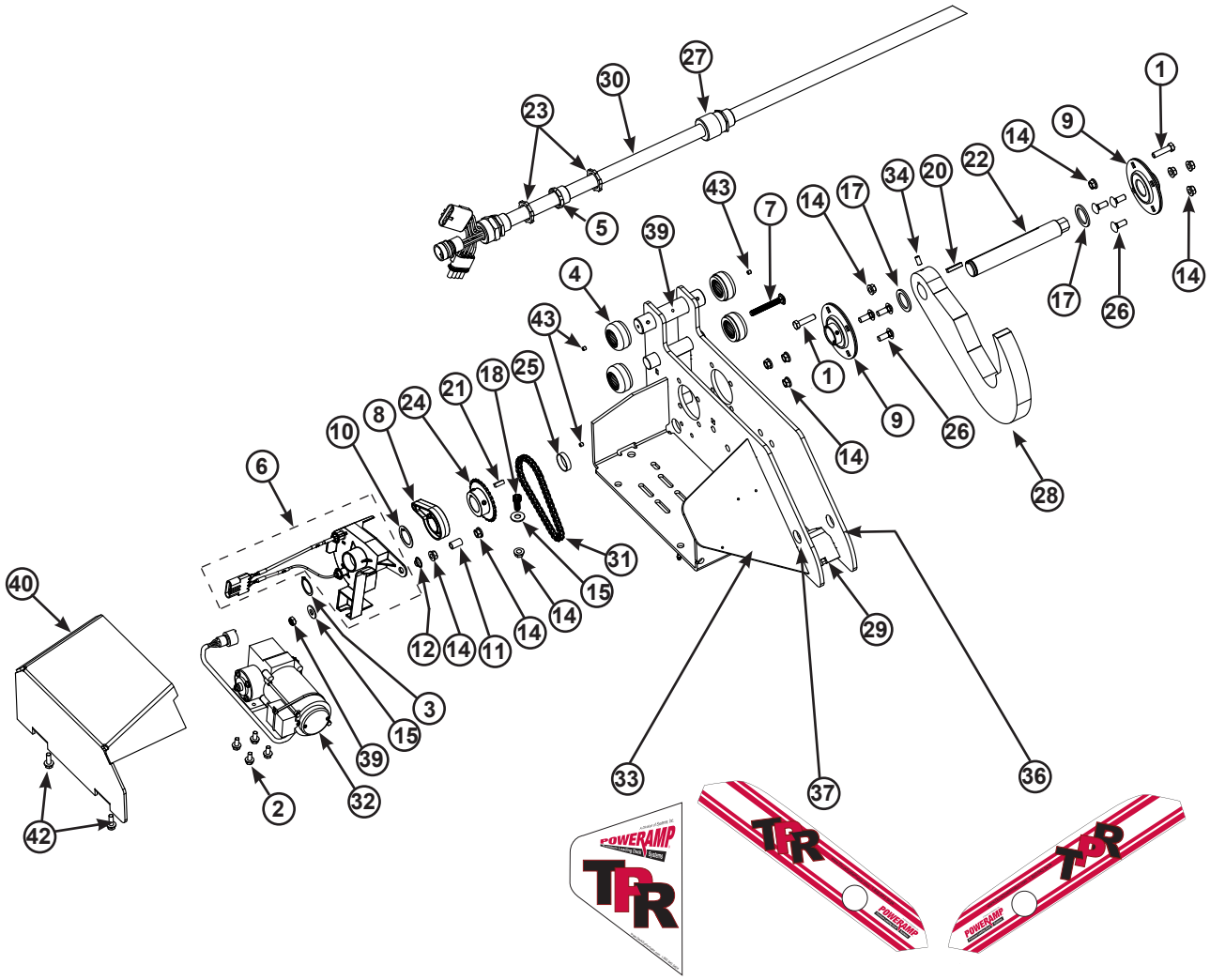

© 2026 Systems, LLC

TPR26 Carriage Assembly (continued)

Item	Quantity	Part Number	Description
1	2	2101-0126	SCREW,HHCS,3/8"-16 X 1-1/2"
2	4	2101-0321	SCREW,HHCS,5/16-18 X 5/8"
3	1	9701-0200	RING , SNAP
4	4	9701-0113	ROLLER ASSEMBLY
5	1	9701-0201	3/4" CONDUIT NIPPLE
6	1	MF2-024-410	LIMIT SWITCH ASSEMBLY
7	1	MF2-028-108	BOLT,CARRIAGE,3/8-16 x 2.75”,TPR26
8	1	MF2-028-410	TARGET,MAGNETIC HOLDER
9	2	9701-0111	BEARING ASSEMBLY
10	1	MF2-028-105	KEYED SHIM
11	1	MF2-024-401	SPACER,MAG SWITCH ASSEMBLY
12	1	MF2-028-106	ROLLED RIM GROMMET
14	11	9701-0204	NUT, LOCK 3/8"-16 SERRATED FLANGE
15	2	MF2-024-405	WASHER,FLAT, 3/8”
17	2	9701-0206	BUSHING, MACHINERY 1-3/4" OD,1-1/4" ID,1/8"THICK
18	1	MF2-024-404	SOCKET HEAD SCREW
20	1	9701-0207	KEY, HOOK 1/4" X 1/4" X 1-1/4"
21	1	MF2-028-107	KEY, DRIVE SPROCKET,1/4" X 1/4" X "
22	1	9701-0110	HOOK SHAFT
23	2	9701-0209	NUT,LOCK 3/4" CONDUIT
24	1	9701-0114	DRIVE SPROCKET,HOOK W/SET SCREW
25	1	MF2-028-104	SPROCKET SPACER
26	6	9701-0211	BOLT, CARRIAGE 3/8"-16 X 1"
27	1	9701-0212	CORD GRIP
28	1	9701-0441	TPR, HOOK, TRIPLE RANGE PROFILE
29	1	IMAR-004-000	TPR26, CARRIAGE WELDMENT
30	1	MF4-184-000	WIRE HARNESS
31	1	9701-0115	CHAIN
32	1	3411-0050	MOTOR ASSEMBLY
33	1	1751-0847	DECAL, TPR
34	1	9701-0213	SCREW SET 5/16"-18 X 5/8"
36	1	1751-0851	DECAL, TPR STRIPE RH
37	1	1751-0850	DECAL, TPR STRIPE LH
39	1	MF2-024-406	NUT, NYLOCK, 3/8-16, LOW PROFILE
40	1	9701-0244	TPR,CHAIN COVER W/ TWO THREADED HOLES
42	2	2101-0010	BOLT, 5/16-18 X 7/8 LG
43	4	2101-0322	SCREW,SHSS,1/4-28 UNF X 1/4 SOCKET CUP

© 2026 Systems, LLC

Roller Track & Springs

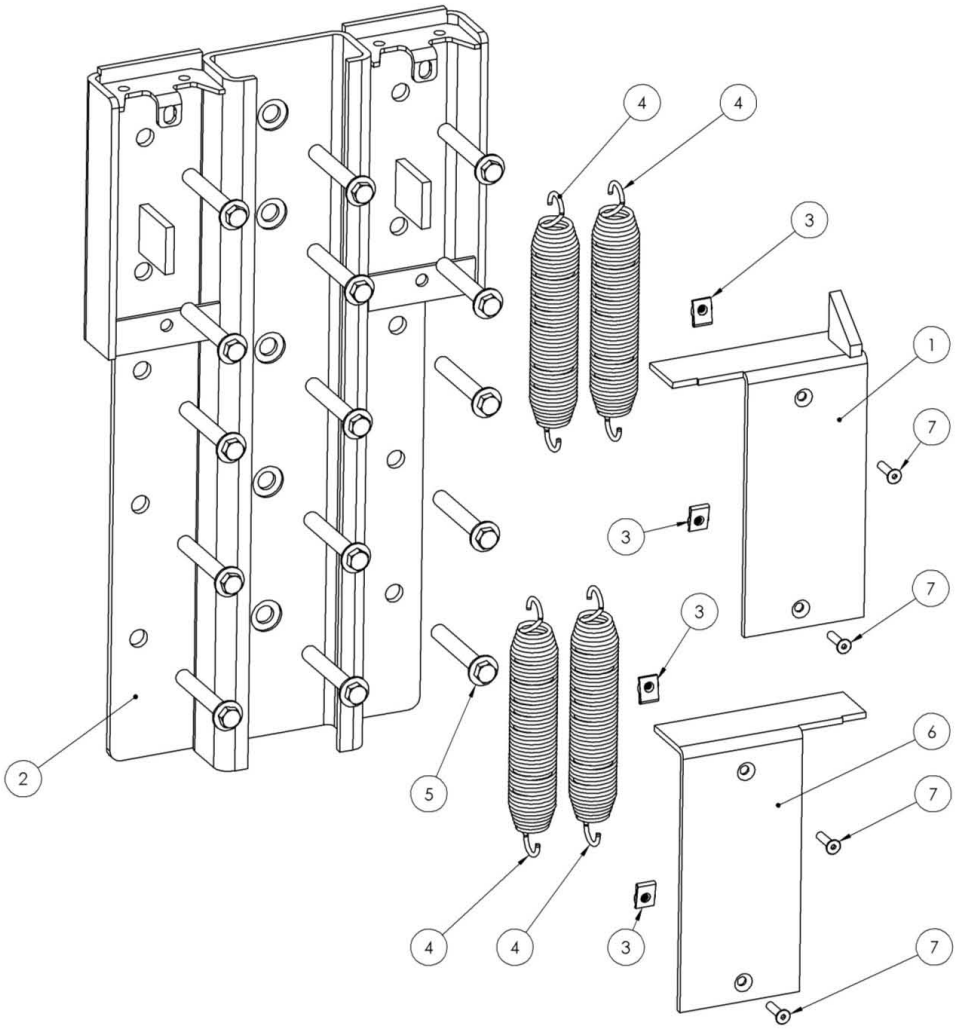

Item	Quantity	Part Number	Description
1	1	9701-0101	SPRING COVER RIGHT HAND
2	1	9701-0100	ROLLER TRACK
3	4	9701-0216	NUT CAGE 5/16"-18
4	4	0941-0016	EXTENSION SPRING
5	15	2101-0319	5/8" X 4" CONCRETE ANCHOR (POWERS #6942 SD OR EQUIV)
6	1	9701-0102	SPRING COVER LEFT HAND
7	4	2101-0069	SCREW, SOCKET 5/16"-18 1-1/4" FLAT HEAD

© 2026 Systems, LLC

Slope Extensions & Spring Plate

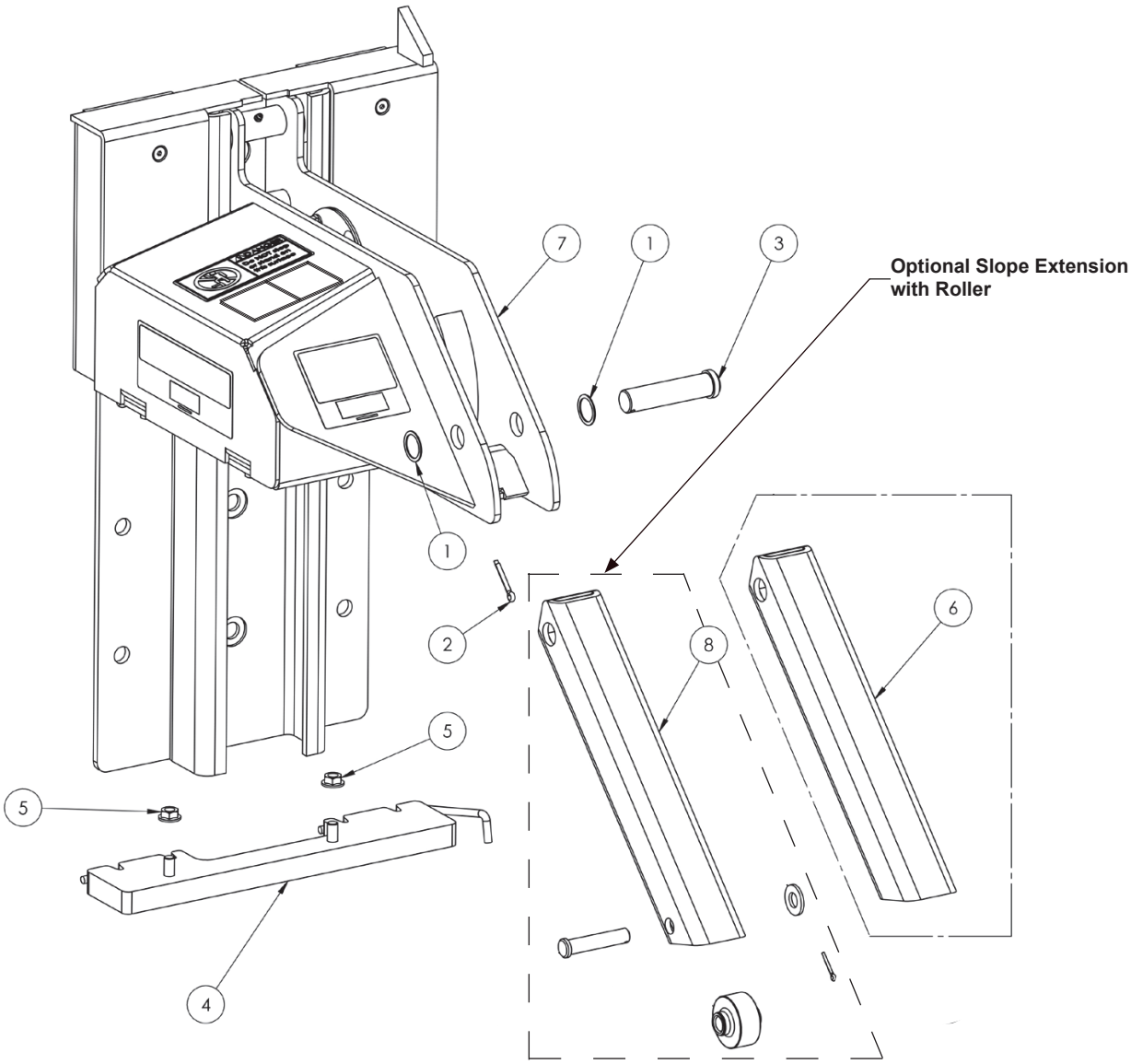

Item	Quantity	Part Number	Description
1	2	9701-0217	WASHER, FLAT 1" X 18 GAUGE
2	1	9701-0218	PIN› COTTER
3	1	9701-0219	PIN, SLOPE EXTENSION PIVOT
4	1	9701-0105	SPRING MOUNTING PLATE ASSEMBLY
5	2	9701-0220	NUT,LOCK 7/16"-14 SERRATED FLANGE
6	*	9701-0104	SLOPE EXTENSION, STANDARD
7	1	9701-100418	CARRIAGE ASSEMBLY, TPR26, POWERAMP, COMPLETE
8	1	9701-0246	SLOPE EXTENSION WITH ROLLER (OPTIONAL)
9	1	9701-0423	SLOPE EXTENSION, DOUBLE KNUCKLE (OPTIONAL NOT SHOWN)

© 2026 Systems, LLC

PARTS

Cantilever Brackets

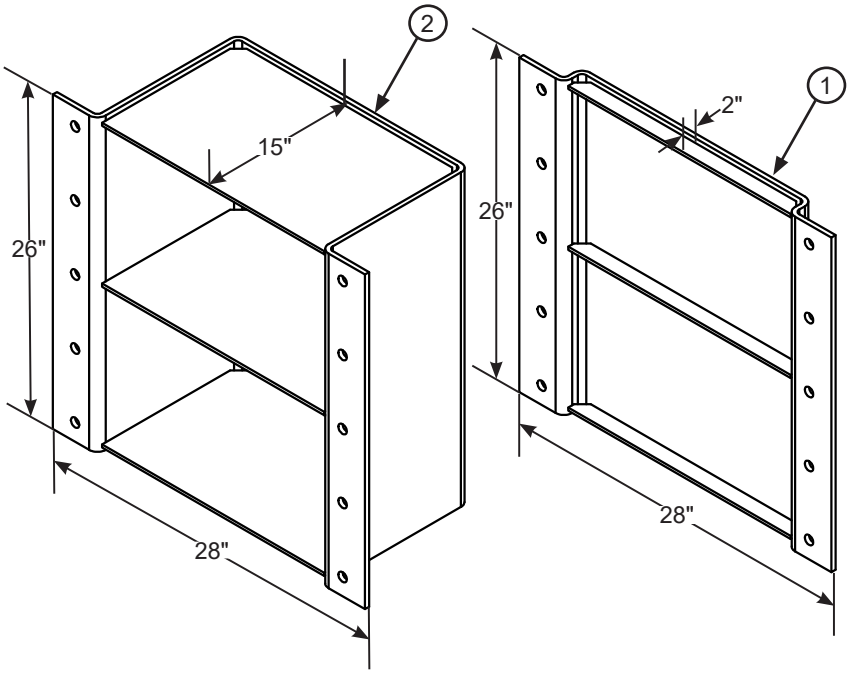

Note:
- 1" and 15" brackets shown for visual reference.

Item	Part Number	Projection
1	9705-0101	2"
	9705-0102	3"
	9705-0103	4"
	9705-0104	5"
	9705-0105	6"
	9705-0106	7"
	9705-0107	8"
	9705-0108	9"
	9705-0109	10"
	9705-0110	11"
	9705-0111	12"
	9705-0112	13"
	9705-0113	14"
2	9705-0114	15"

Z-Bracket

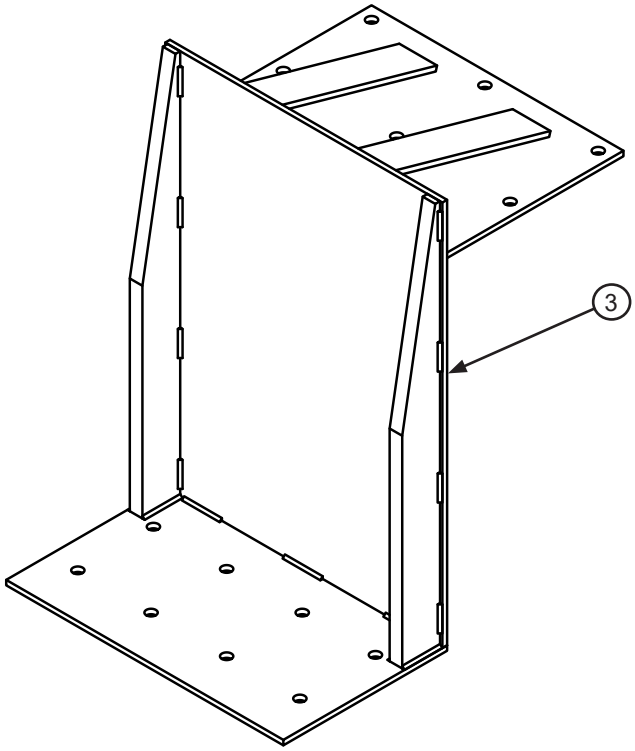

Item	Part Number
3	9703-____*
*Contact Systems Technical Services to determine application and size.	

© 2026 Systems, LLC

OSLA (Outside Light Assembly) Units Shipped Before 10/2024

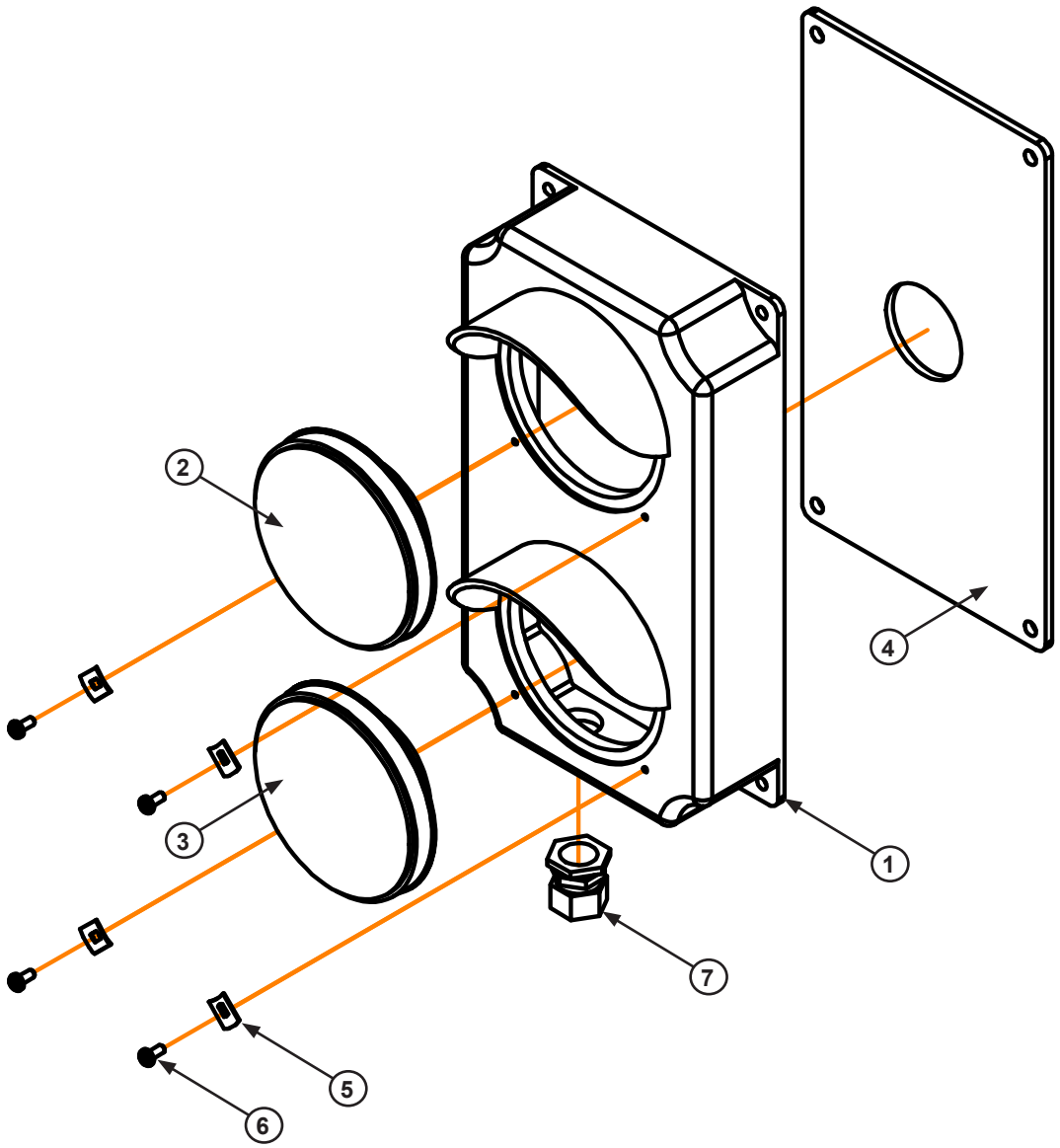

Item	Quantity	Part Number	Description
1-7	**1**	**3055-0011**	**Complete Light Housing, Yellow Plastic, With LED Lights**
1	1	3051-0063	Housing, Main, Yellow
2	1	3051-0147	Red LED Lens/Housing/Circuit Assembly, 12v
3	1	3051-0149	Green LED Lens/Housing/Circuit Assembly, 12v
4	1	3051-0068	Mounting Gasket
5	4	3051-0105	Clip, Lens Holding
6	4	3051-0104	Screw, Lens Holding
7	1	*	Conduit Fastener, 3/4" x 3/8"

© 2026 Systems, LLC

OSLA (Outside Light Assembly) Units Shipped After 10/2024

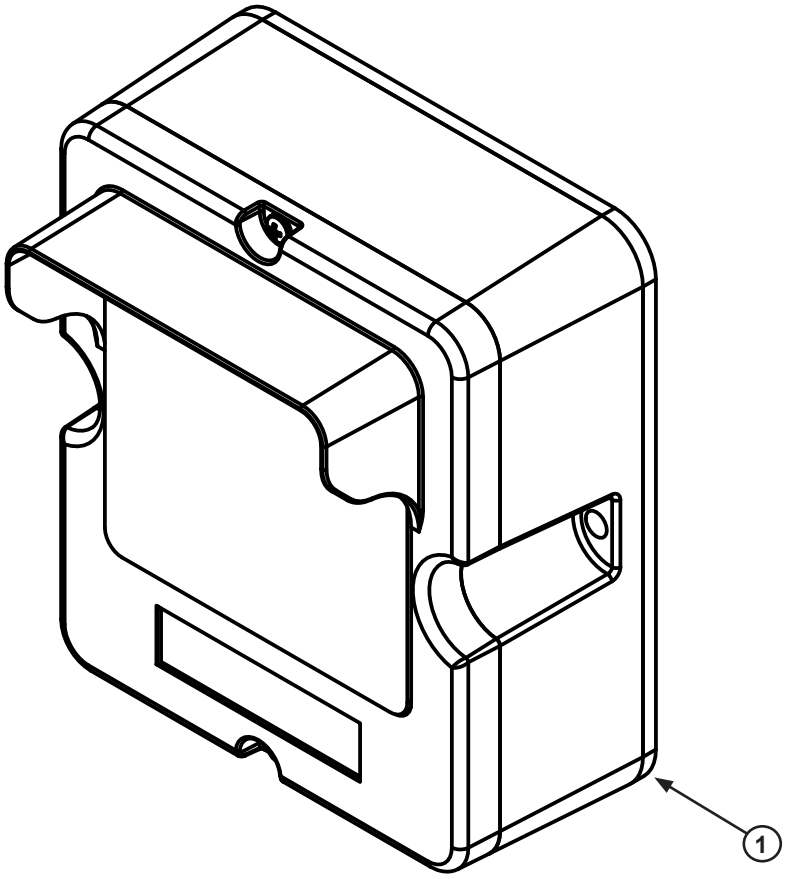

Item	Qty	Part No.	Description
1	1	3056-0015	KIT,OUTSIDE LIGHT ASSY,12 VDC

© 2026 Systems, LLC

Signs

A

C

B

Item	Part Number	Description
A	1751-0033	Outside Sign, Pull In/Out
B	1751-0034	Outside Sign, Pull In/Out (Mirror Image)
C	1751-0036	Inside Sign, Enter On Green Only

© 2026 Systems, LLC

Optional Vehicle Present Sensor Kit (Compatible with TPR26 Carriage Only)

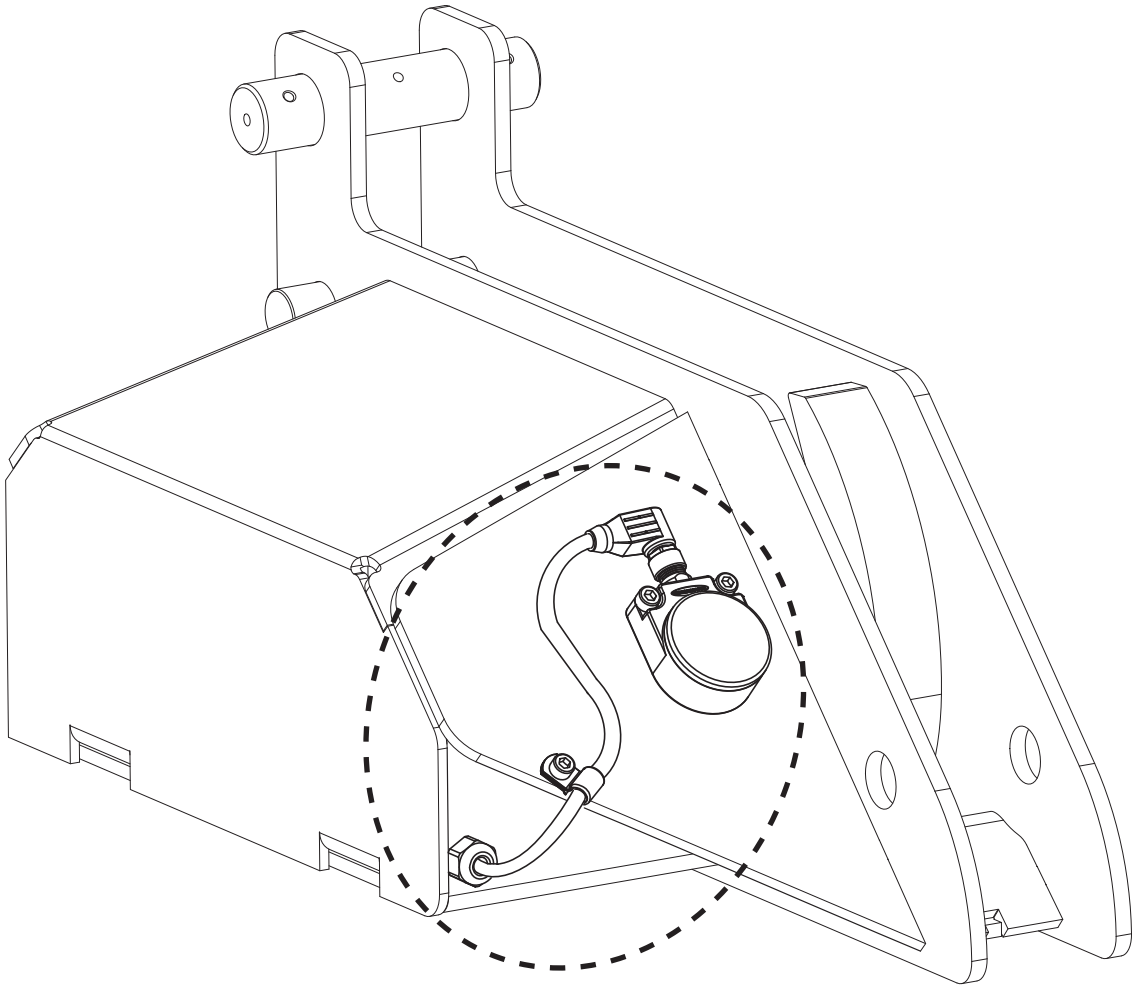

Item	Qty	Part No.	Description
1	1	0966-100003	KIT,VEHICLE PRESENCE,TPR26

Easily upgrade your TPR26 restraint with a Vehicle Presence Sensor.* Pre-drilled and pre-wired for straightforward installation, the kit can be added in the field to enable myQ® Enterprise functionality. Contact Technical Services for more information.

** iDock Controller with sensor-enabled firmware required*

myQ | Enterprise
Intelligent Dock Management

© 2026 Systems, LLC

Customer Information

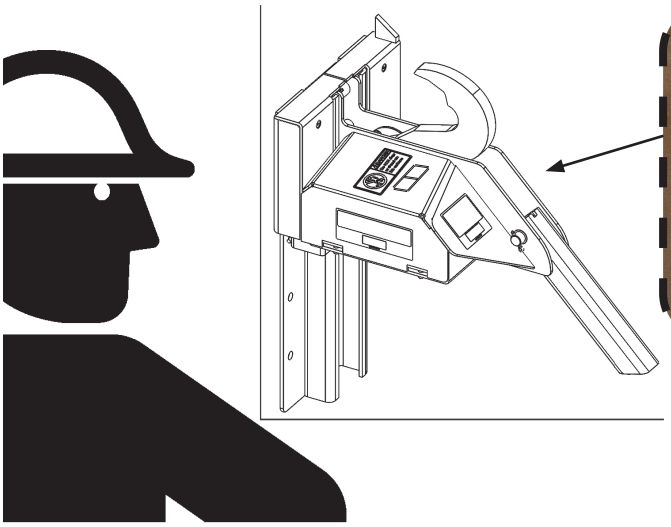

Figure 32

Figure 33

Serial Number

Carriage Number

NOTE: Refer to Figure 32 for orientation of vehicle restraint and Figure 33 for example of decals.

The model/serial number decal is located on the right side panel of the restraint.

When you receive your new equipment, write down the model and serial number in the form provided. This will help ensure safe keeping of the numbers in the event the model/serial number decal (**A, B**) becomes lost or damaged.

Also, write down Systems, LLC's order number, the company that installed the equipment, and the original owner's name. This will all help to identify the specific equipment if more information is required.

When ordering, use part numbers and description to help identify the item ordered. Do not use "item" numbers. These are only for locating the position of the parts. Always give MODEL NUMBER and/or SERIAL NUMBER.

For service, call or contact:

Systems, LLC
P.O. Box 309
Germantown, WI 53022

Phone: (800) 643-5424
Fax: (262) 255-5917

www.loadingdocksystems.com

Dock Leveler Information

Model _____

Serial No. _____

Systems, LLC, Job No. _____

Vehicle Restraint Information

Model _____

Serial No. _____

Systems, LLC Order No. _____

Original Owner Information

Name _____

Address _____

_____

Installer Information

Name _____

Address _____

_____

Date of Installation _____

© 2026 Systems, LLC

STANDARD PRODUCT WARRANTY

SYSTEMS, LLC warrants that its products will be free from defects in design, materials and workmanship for a period of one (1) year from the date of shipment. All claims for breach of this warranty must be made within 30 days after the defect is or can with reasonable care, be detected. In no event shall any claim be made more than 30 days after this warranty has expired. In order to be entitled to the benefits of this warranty, the product must have been properly installed, maintained and operated in accordance with all manufacturer's recommendations and/or specified design parameters and not otherwise have been subject to abuse, misuse, misapplication, acts of nature, overloading, unauthorized repair or modification, application in a corrosive environment or lack of maintenance. Periodic lubrication, adjustment and inspection in accordance with all manufacturers' recommendations are the sole responsibility of the Owner/User.

In the event of a defect, as determined by SYSTEMS LLC, covered by this warranty, SYSTEMS LLC shall remedy such defect by repairing or replacing any defective equipment or parts, bearing the cost for the parts, labor and transportation. This shall be exclusive remedy for all claims whether based on contract, negligence or strict liability.

WARRANTY LIMITATIONS

THE ABOVE WARRANTIES ARE IN LIEU OF ANY OTHER WARRANTIES, WHETHER EXPRESSED OR IMPLIED, INCLUDING BUT NOT LIMITED TO ANY IMPLIED WARRANTY OF MERCHANTABILITY OR FITNESS FOR A PARTICULAR PURPOSE. SYSTEMS LLC AND ITS SUBSIDIARIES SHALL NOT IN ANY EVENT BE LIABLE TO ANYONE, INCLUDING THIRD PARTIES, FOR INCIDENTAL, CONSEQUENTIAL OR SPECIAL DAMAGES OF ANY KIND INCLUDING BUT NOT LIMITED TO, BREACH OF WARRANTY, LOSS OF USE, LOSS OF PROFIT, INTERRUPTION OF BUSINESS OR LOSS OF GOODWILL.